PRO 16™ SERIES

PERSONAL MIXING & DISTRIBUTED AUDIO

AVIOM®

PERSONAL MIXING & DISTRIBUTED AUDIO

Aviom's Pro16™ Series has revolutionized personal mixing and audio distribution over Cat-5e. Using Aviom's high-speed transport technology, A-Net®, as the backbone, Pro16 systems have simplified installations in performance spaces, recording studios, houses of worship, schools, and commercial facilities around the world.

THE INDUSTRY STANDARD FOR PERSONAL MONITOR MIXING

The Pro16 Monitor Mixing System guarantees perfect monitor and cue mixes at every rehearsal, show, and recording session. Featuring the A-16II and A-16R Personal Mixers, the Aviom system allows every performer to customize his or her mix. The interface for musicians is intuitive, and system setup and teardown are quick. No matter the size of the ensemble, venue, or audience, the Pro16 Series is a proven solution for improving sound quality—and performance.

FAST & EFFICIENT AUDIO DISTRIBUTION

Aviom's suite of Pro16 I/O and network devices offers a simple and cost-effective way to distribute multi-channel audio in real time, across long distances, to multiple locations. With sub-millisecond latency, long Cat-5e cable runs, and no need for computer-based configuration at any time, the Pro16 Series saves installers, designers, and engineers valuable time, while delivering exceptional performance. Whether you're connecting a simple digital snake or building an extended audio distribution system, the Pro16 Series scales to your exact needs.

ACTIVATED BY A-NET®

Aviom's Pro16 products are connected by the Pro16 version of A-Net, Aviom's groundbreaking digital audio networking technology. A-Net uses standard Ethernet-style cables and connectors, but unlike Ethernet, A-Net was designed specifically to meet the unique demands of streaming digital audio in real time without complicated setup or configuration.

Pro16 A-Net uses 24-bit, 48kHz digital audio, with no data compression. Because A-Net is fully optimized for audio, data transmission is lightning fast—with less than a single millisecond of latency across an entire system, from analog input to analog output, even with a long string of daisy-chain connections.

Pro16 A-Net also supports extended Cat-5e cable runs of up to 500ft/150m between each device. Refreshing a signal for another run is as simple as connecting another A-Net device. Because there is no limit to the number of hops an A-Net stream can make, Pro16 systems can be extended virtually without limit.

PRO16 A-NET

- ***Sub-millisecond latency, from analog in to analog out***
- ***24-bit, 48kHz digital audio, with no data compression***
- ***500ft/150m Cat-5e cable runs***
- ***Up to 64 channels on a cable***
- ***Bidirectional configurations up to 48x16 and 32x32***
- ***No ground loops or hum***
- ***Fiber compatible***
- ***Unlimited lossless digital splits***
- ***Simple plug-and-play setup***

APPLICATIONS

Pro16 systems can be built to the specifications of a wide range of applications. Whether you're working on an arena stage or in a local club, in a Broadway pit or school theater, or in a church or studio of any size, Aviom's Pro16 Series offers an unparalleled combination of speed, simplicity, and performance.

Aviom offers products designed for a wide range of audio distribution and networking applications found in pro sound, commercial AV, broadcast, recording, and worship facilities, including audio conferencing, multi-source selection, and AES3 digital audio distribution over long distances. All of these products are intuitive to use, while at the same time save installation time, money, and labor.

For more on our full range of products and solutions, visit www.Aviom.com.

PERSONAL MIXERS

A-16II PERSONAL MIXER

The A-16II allows individual performers to create custom monitor mixes tailored to their individual needs. Designed for use in live performance or the studio, the A-16II Personal Mixer provides control over channel volume, grouping, pan, stereo spread, as well as master volume and tone.

- Fully adjustable volume and pan per channel
- Line/headphone stereo output
- Sixteen presets for storing custom mixes
- Channel solo, mute, and group functions
- Global trim for reducing all channel volumes
- Master Volume, Treble, and Bass control

A-16R PERSONAL MIXER

Designed specifically to simplify connections to wireless in-ear monitors and unpowered floor wedges, the A-16R couples all the mixing features of the A-16II Personal Mixer with additional connectivity options.

- Rear-panel balanced line-level outputs (XLR and TRS)
- Stereo balanced inserts
- Front-panel headphone jack
- Stereo Mix In for local analog audio, such as a click track or program material
- ***Remote controllable***

A-16CS CONTROL SURFACE

The A-16CS Control Surface is an optional remote controller for the A-16R Personal Mixer.

CONNECTING YOUR PERSONAL MIXER

Both the A-16II and the A-16R can be used with almost any output device—from headphones and in-ear monitors (IEMs) to power amps and powered wedges. Both models of Personal Mixer accept headphones or wired IEMs directly through a ¼" TRS headphone jack.

For wireless IEMs and stereo wedges, connections are slightly different, depending on the model of Personal Mixer. With the A-16II, you'll need a standard Y-cord and a convenient place to put the IEM transmitter unit or a power amp (for passive wedges). The A-16R has left and right line-level outputs (eliminating the Y cord), and if you add the A-16CS for remote control, the A-16R can be placed in the same rack as any transmitters or amps.

AN-16/i INPUT MODULE

The AN-16/i provides 16 balanced line-level inputs into a Pro16 system. Audio is converted to digital and transmitted via A-Net. An audio thru jack is available for each input channel, allowing the AN-16/i to be seamlessly inserted into an existing audio signal path.

- Sixteen balanced inputs (TRS)
- Sixteen balanced thru jacks (TRS)
- A-Net Out (RJ45)
- A-Net Expansion jack for combining two A-Net streams onto one cable (RJ45)

AN-16/i-M MIC INPUT MODULE

The AN-16/i-M is a 3U-high rack-mounted mic- and line-level input device with sixteen high-quality microphone preamps. Each channel features a three-segment level meter, continuously variable gain control, phase invert, 48-volt phantom power, and a low-cut filter.

- 16 balanced inputs (XLR/TRS combo jack)
- 16 passive mic splits (XLR male)
- 16 balanced insert sends and returns (TRS)
- A-Net Out and Aux Out (EtherCon® connectors)
- A-Net Expansion (RJ45)

AN-16/o OUTPUT MODULE

The AN-16/o provides sixteen balanced mic- or line-level analog outputs, with switchable output levels per channel pair.

- 16 balanced outputs (DB25)
- A-Net In, Out, and Expansion (EtherCon® connectors)

AV-P2 OUTPUT MODULE

The AV-P2 Output Module provides up to two channels of analog outputs from a Pro16 A-Net digital audio stream.

- 2 balanced outputs (Euroblock connectors)
- Independently selectable output levels for left and right channels (DIP switches)
- Rotary channel selector
- A-Net In and A-Net Out (RJ45)

CONSOLE INTERFACE CARDS

AVIOM16/o-Y1 A-NET CARD FOR YAMAHA®

The Aviom16/o-Y1 A-Net Card eliminates the need for an analog input module, providing a direct digital interface between Yamaha digital products and Aviom's Pro16 Series, including the A-16II and A-16R Personal Mixers.

- One A-Net Out (EtherCon® connector)
- Compatible with mini-YGDAI (MY) card slot
- External configuration DIP switches

D-16c A-NET CARD FOR DiGiCo®

The D-16c A-Net Card eliminates the need for an analog input module, providing a direct digital interface between DiGiCo digital consoles and Aviom's Pro16 Series products, including the A-16II and A-16R Personal Mixers.

- One A-Net Out (EtherCon® connector)
- Compatible with D1 and D5 Series consoles
- Internal configuration DIP switches

A-NET IN DIGITAL CONSOLES

Select manufacturers of digital mixing consoles now include Pro16 A-Net outputs as an option. Look for the A-Net Active logo, and consult your console's documentation or visit www.Aviom.com/partners to see the complete list of consoles offering simplified direct digital connectivity to Aviom's Pro16 Series.

A·NET ACTIVE™

A-16D PRO A-NET DISTRIBUTOR

The A-16D Pro accepts one Pro16 A-Net input and provides nine parallel outputs. In addition to A-Net audio, the eight A-Net Out jacks include isolated (floating ground) DC power for powering Personal Mixers over Cat-5. The ninth output is an unpowered A-Net Thru connector, designed primariy for distributing a copy of the A-Net signal to a second A-Net Distributor or remote location.

- One A-Net In (EtherCon® connector)
- Eight powered A-Net Outs (EtherCon® connectors)
- One unpowered A-Net Thru (EtherCon® connector)

A-16D A-NET DISTRIBUTOR

With one A-Net input and eight parallel A-Net outputs, the A-16D replaces daisy-chain connections with star configurations. The A-16D can also distribute DC power out any of the eight A-Net Out jacks, eliminating the need to connect a power supply at each Personal Mixer.

- One A-Net In (RJ45)
- Eight A-Net Outs (RJ45)
- Eight optional DC power inputs

AN-16SBR SYSTEM BRIDGE

The AN-16SBR System Bridge can be used to simplify Cat-5 connections in systems with more than 32 channels. One AN-16SBR is used at each end of every 48- or 64-channel run, to combine and separate 16-channel A-Net streams onto a single cable.

- Four A-Net ports (EtherCon® connectors)
- One Bridge port (EtherCon® connector)
- Supports up to 64x0, 48x16, or 32x32

SYSTEM BRIDGES & A-NET EXPANSION

The AN-16SBR System Bridge combines up to four 16-channel A-Net streams onto a single cable. The directions of the streams are independent, so systems can be configured up to 64x0, 48x16, or 32x32. One System Bridge is placed at each end of a run, combining and separating the A-Net streams.

For systems using 32 channels or fewer, A-Net Expansion jacks allow two A-Net streams to be carried on a single cable, without additional hardware. Every Pro16 I/O module includes an A-Net Expansion jack.

ACCESSORIES

MT-1 MIC MOUNT

The MT-1 allows an A-16II Personal Mixer or A-16CS Control Surface to be mounted on a standard mic stand. The MT-1 attaches with three screws to the bottom of an A-16II or A-16CS.

EB-1 EXTENSION BRACKET

The EB-1 allows an A-16II or A-16CS to mount to the shaft of a standard mic or music stand. The EB-1 is used with the MT-1 Mic Mount.

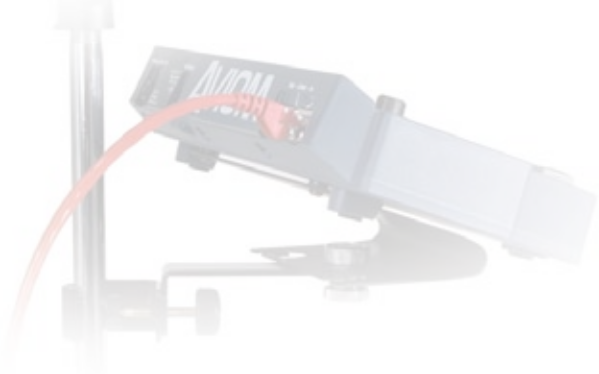

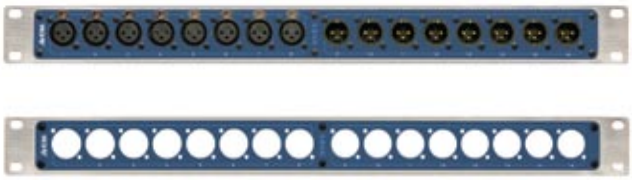

PB28 MODULAR PATCH BAY

The PB28 Patch Bay System is a universal modular patching system that allows the user to configure custom patch panels. Each blank PB28 Patch Panel accepts two eight-channel modules, which are available with a variety of audio and data connectors.

COMPONENT	FRONT PANEL	REAR PANEL
28-XM-DB	XLR male	DB25 multipin, analog
28-XF-DB	XLR female	DB25 multipin, analog
28-AES-DB	XLR male (4) XLR female (4)	DB25 multipin, AES3 digital (Yamaha® and Digidesign®/ Tascam® compatible pinouts)
28-XM-XF	XLR male	XLR female
28-XF-XM	XLR female	XLR male
28-EC-EC	EtherCon® RJ45	EtherCon® RJ45
PB28 Patch Panel	1U blank panel, accepts two modules	

BUILDING A PRO16 SYSTEM

Getting started with a Pro16 system requires only an input module (such as the AN-16/i) and either a Personal Mixer or an output module (such as the AN-16/o). Because all Pro16 Series devices are compatible, a system can be customized by selecting additional components: A-Net Distributors for parallel Cat-5e connections, output modules for digital splits, Personal Mixers for more performers, and so on.

STEP 1: AUDIO IN, A-NET OUT

To get audio into the system, select an input module or console interface card. Audio can be drawn from virtually any source: microphones, console outputs or inserts, electronic instruments, CD players, etc.

In most live or studio environments, audio will be a combination of channel inserts or direct outs, along with sub mixes, aux outs, groups, or busses.

MODEL	APPLICATION
AN-16/i	line-level analog
AN-16/i-M	mic- or line-level analog
Aviom16/o-Y1	Yamaha MY card slot
D-16c	DiGiCo D1/D5 Series console

STEP 2: A-NET IN, A-NET OUT

The Pro16 Series includes several devices which can be used to simplify network connections. A-Net Distributors are used for parallel A-Net connections or to refresh an A-Net signal, while System Bridges allow multiple A-Net streams to be carried on a single cable.

In addition, most Pro16 devices include an A-Net Out jack, which can be used for daisy chaining additional Pro16 devices.

MODEL	APPLICATION
A-16D	one in, eight out (A-Net with optional power)
A-16D Pro	one in, nine out (eight powered, one unpowered)
AN-16SBR	carrying up to four A-Net streams on one cable

STEP 3: A-NET IN, AUDIO OUT

For Personal Mixing systems, the A-16II will fit most performers' needs in most situations. Use the A-16R to simplify connections to wireless in-ear monitors and power amps, to add outboard effects to a mix, or to add an auxiliary local signal to the mix.

Add the A-16CS Control Surface to provide remote control of an A-16R.

The AN-16/o can be used anywhere you need to convert an A-Net stream back to its individual analog channels.

MODEL	APPLICATION
A-16II	most personal mixing applications
A-16R	personal mixing requiring: *-rack-mounting* *-simplified analog connections* *-insert points* *-Mix In*
A-16CS	remote control of A-16R
AN-16/o	16 line- or mic-level outputs

All Pro16 Series products are compatible and can be used interchangeably to tailor a particular system to the needs of a given application. The modularity of the system allows a designer to select the products that best fit the requirements of the job. Cat-5e interconnections simplify setup and speed installation.

SAMPLE SYSTEMS

MONITOR MIXING

BASIC FOUR-MIXER SYSTEM

1 *AN-16/i Input Module*
1 *A-16D Pro A-Net Distributor*
4 *A-16II Personal Mixers*

Sixteen channels of audio are drawn from the console and patched to an AN-16/i Input Module, which converts the audio to digital. The digital audio is output as A-Net, to an A-16D Pro A-Net Distributor on stage. The A-16D Pro supplies audio and power to the four A-16II Personal Mixers. Performers can monitor with headphones, IEMs, or wedges. Up to four additional Personal Mixers can be connected directly to this distributor.

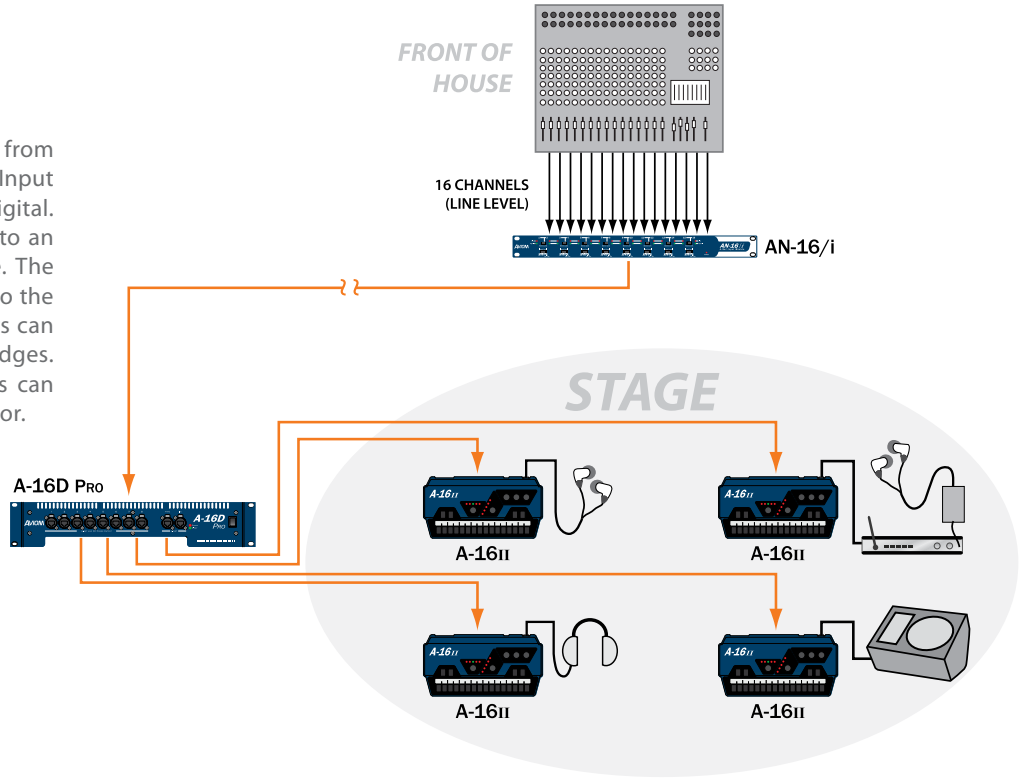

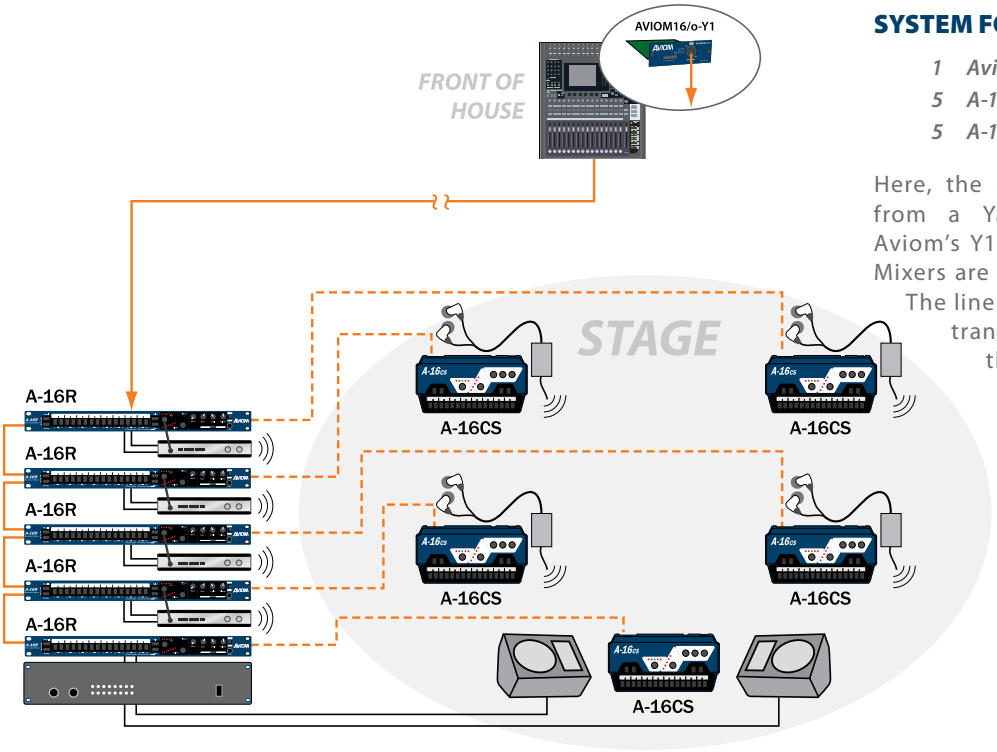

SYSTEM FOR WIRELESS IEMs & WEDGES

1 *Aviom16/o-Y1 A-Net Card*
5 *A-16R Personal Mixers*
5 *A-16CS Control Surfaces*

Here, the A-Net stream is output directly from a Yamaha® digital console, using Aviom's Y1 A-Net Card. Five A-16R Personal Mixers are daisy-chained in a rack on stage. The line outputs of four are connected to transmitters for wireless IEMs, while the fifth is connected to a power amp, which drives stereo wedges. Each performer on stage has an A-16CS Control Surface for remotely controlling his or her A-16R.

DUAL-FEED SYSTEM

- 2 *AN-16/i Input Modules*
- 2 *A-16II Personal Mixers*
- 4 *A-16R Personal Mixers*
- 4 *A-16CS Control Surfaces*

In cases where some performers want to mix a different set of channels, simply send multiple A-Net streams to the stage. Channels that are common to both streams (such as lead vocals, guitar, and bass; shown in green in the inset) are patched from the Thru jack on one AN-16/i to an input jack on the other AN-16/i. The red and blue arrows at right show how drum and backing vocal channels are managed in the two streams, providing more control over the drum mix to the backline (#1) and more vocal control to the frontline (#2). The Personal Mixers for the backline are daisy-chained.

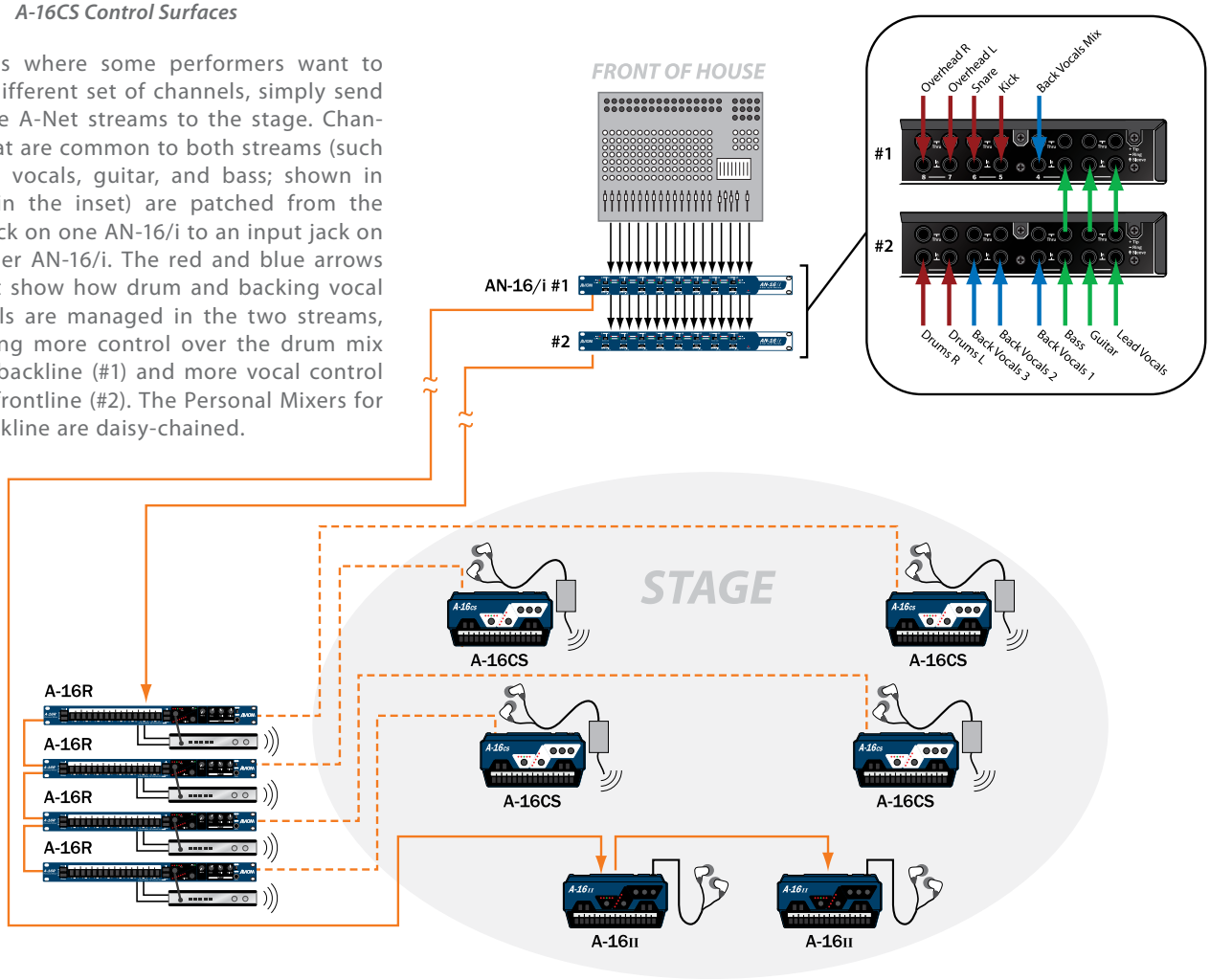

DAISY CHAIN OR DISTRIBUTE?

A-16II and A-16R Personal Mixers can be connected serially (daisy chaining one to the next) or in parallel using an A-Net Distributor such as the A-16D Pro. There are no limits on the number of serial or parallel connections that can be used, and a single system may utilize both approaches. Daisy chaining is often best suited for connecting devices in the same rack (such as a stack of A-16R Personal Mixers), while parallel connections offer the security of dedicated cable runs for each Personal Mixer and the convenience of providing power over the Cat-5 cable, eliminating the need to connect individual power supplies to the Personal Mixers.

A-16D Pro A-Net Distributor

SAMPLE SYSTEMS

DISTRIBUTED AUDIO & DIGITAL SNAKES

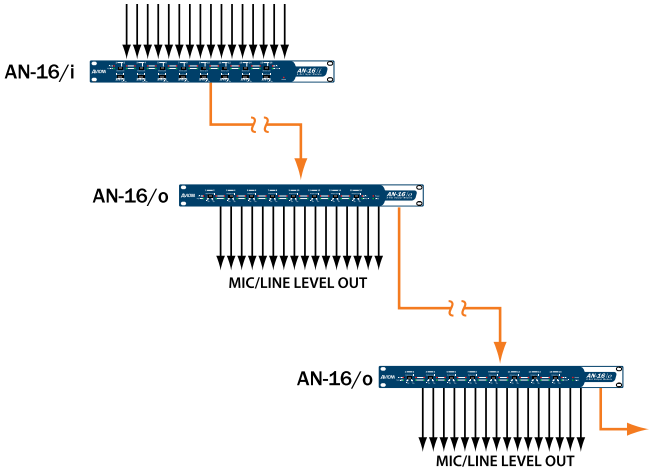

16×0 DISTRIBUTION WITH DIGITAL SPLITS

1 *AN-16/i Input Module*
2 *AN-16/o Output Modules*

Sixteen channels are input to an AN-16/i, whose A-Net Out is connected to the A-Net In on an AN-16/o Output Module up to 500ft/150m away. The AN-16/o provides 16 mic- or line-level outputs. A second AN-16/o is daisy-chained to the first, providing a digital split, also up to 500ft/150m away. An unlimited number of splits can be supported in this manner.

The serial connections shown here can be replaced with parallel connections using an A-Net Distributor.

32×16 DIGITAL SNAKE, WITH MONITOR SYSTEM

2 *AN-16/i-M Mic Input Modules*
3 *AN-16/o Output Modules*
2 *AN-16SBR System Bridges*
2 *Aviom16/o-Y1 A-Net Cards*
1 *A-16D Pro A-Net Distributor*
Personal Mixers as needed

Thirty-two channels of inputs on stage are connected to two AN-16/i-M Mic Input Modules. These signals are patched to the console at Front of House (mic or line level) through two AN-16/o Output Modules.

The console has two Y1 A-Net Cards, one of which is outputting up to 16 channels of returns, patched to processors and amp racks back on stage through an AN-16/o. The second Y1 card is outputting 16 channels for a Pro16 Monitor Mixing System.

A pair of AN-16SBR System Bridges allows all four A-Net streams to be carried on a single cable between stage and FOH.

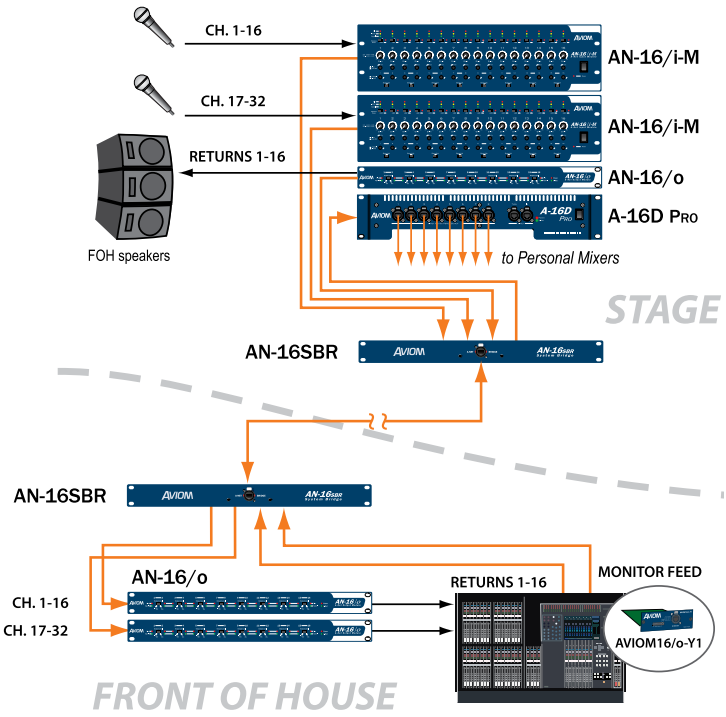

48×16 DIGITAL SNAKE

- *3 AN-16/i-M Mic Input Modules*
- *4 AN-16/o Output Modules*
- *2 AN-16SBR System Bridges*
- *1 Aviom16/o-Y1 A-Net Card*

Forty-eight channels of stage inputs are connected to three AN-16/i-M Mic Input Modules. All 48 channels are transported to FOH, where three AN-16/o Output Modules convert the audio to analog (mic or line level) for inputting to the console.

Sixteen channels of returns are output from the console through a Y1 A-Net Card. These channels are transported to the stage, where an AN-16/o converts them back to analog for connecting to amps and processors.

A pair of AN-16SBR System Bridges allows all four A-Net streams to be carried on a single cable between stage and FOH.

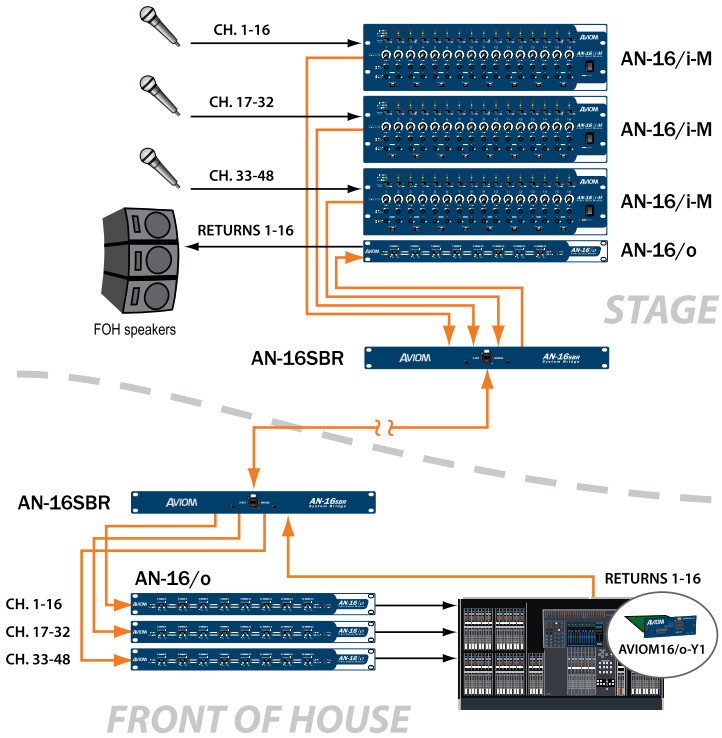

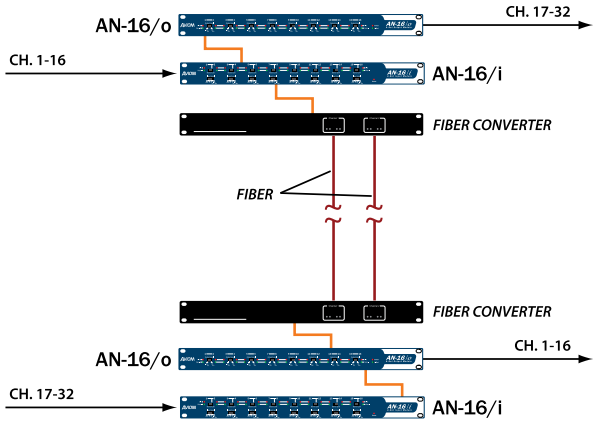

16×16 A-NET OVER FIBER

- *2 AN-16/i Input Modules*
- *2 AN-16/o Output Modules*
- *2 media converters*

Using certain third-party media converters, 16-channel A-Net streams can be transmitted long distances over single- or multi-mode fiber for extended cable runs. Each fiber can carry a single A-Net stream. Here an AN-16/o is connected to the A-Net Expansion jack on an AN-16/i. With the A-Net Out of the AN-16/i connected to the media converter, and a similar setup on the other end of the fiber run, 16 channels in each direction are transmitted over the fiber optics.

PERSONALITIES

"I can't tell you how happy I am with the quality. Zero buzz problems, line noise, etc. It sounds so much better not having 300-plus feet of analog snake cable before the recorder."

Michael Comstock
Owner and Sound Engineer
Indre Studios

"As an engineer-geek, I love the Aviom Pro16 system for its flexibility and control. As a businessman, I love it for its low installation cost. It's easy to install, it's infinitely expandable, and don't forget, just about any kind of multi-channel audio connectivity can be simplified down to Cat-5e cabling."

Andy Hong
Studio Designer and Record Producer

"On tour I'm running in-ear systems from A-16II Personal Mixers and have yet to get a complaint. I think Aviom as a digital multicore has unlimited possibilities in the world of television and corporate events."

Rod Matheson
Mix Engineer

"UNLIMITED POSSIBILITIES..."

◀ *"Every good producer/engineer knows the value of a really 'vibey' headphone mix in the studio, and they're not easy to get. Aviom is the benchmark for these kinds of systems. It sounds great, is very reasonably priced, and has lots of inputs, which most other systems lack. It also empowers artists to make adjustments themselves and that takes the onus off of us as engineers. Aviom should be used wherever there's live playing and vocals being recorded."*

Neil Dorfsman
Grammy Award-Winning Record Producer and Engineer

"We run a dual Aviom system, and we're probably running 35 different monitor mixes. The guys in the band just totally dig the Aviom system."

Reed Hall
Director of Audio and Technical Production, Lakewood Church, Houston, Texas

▶ *"The Aviom digital snake speeds up our workflow considerably. It's revolutionizing some of the things I can do, especially as people in the film industry transition to digital gear. We're always breaking new ground, and things that help us like the Aviom gear are a godsend."*

Mark Ulano
Academy Award®-Winning Sound Recordist

▶ *"Aviom is a priceless tool for working musicians. Since the '60s, I have almost never been able to hear vocals as I would like. The Aviom system has offered a profound change. Now I hear exactly what I need, at precisely the volume that's comfortable for me. Plus, I have preset mixes for different songs at my fingertips. This has brought a new love and enjoyment to live performance for me."*

Wayne Kramer
Singer/Guitarist of The MC5 and Film Score Producer

AVIOM pioneered personal mixing with its Pro16™ Monitor Mixing System and continues to break new ground with the revolutionary Pro64™ Series of audio networking products. With tens of thousands of products in the field today, Aviom has set the standard for cost-effective, scalable digital solutions.

All Aviom systems harness the power of A-Net®, Aviom's innovative high speed digital audio transport technology that simplifies system design while enhancing control and flexibility. All Aviom products are designed, tested, and manufactured in the USA.

PRO 16™ SERIES

Photo credits: Ray Legnini, Loren Molinare, Tom Knesel, Craig Sibley, Joel Brazy, Margaret Kramer, Sean Smith, Michael Comstock, Darren Takegami, Michael Stusiak, and Jay Ballinger.

 P/N 9304 0103 0002 rev. 1.1 071707

A·NET®

AVIOM®

1157 Phoenixville Pike, Suite 201 | West Chester, PA 19380 USA | Phone 610.738.9005 Fax 610.738.9950 | www.Aviom.com