www.americanmusical.com

Obey™ 4

User Manual

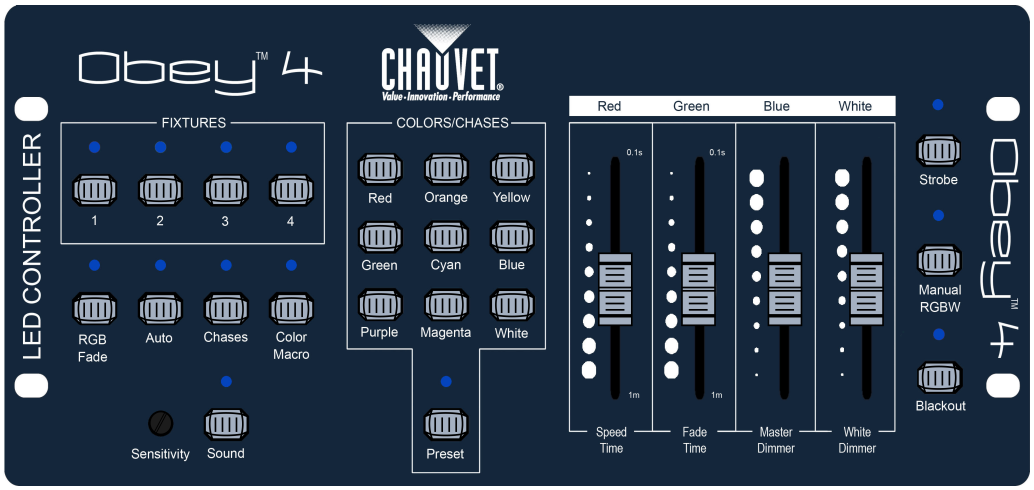

CHAUVET®
Value • Innovation • Performance

TABLE OF CONTENTS

1. BEFORE YOU BEGIN 3

WHAT IS INCLUDED 3
UNPACKING INSTRUCTIONS 3
MANUAL CONVENTIONS 3
ICONS 3
SAFETY INSTRUCTIONS 4

2. INTRODUCTION 5

FEATURES 5
PRODUCT OVERVIEW 5

3. SETUP 6

AC POWER 6
MOUNTING 6
Orientation 6
Installation 6
FIXTURE ADDRESSING 6

4. OPERATING INSTRUCTIONS 7

PRESET OPERATION 7
RGB FADE OPERATION 7
AUTO OPERATION 7
CHASE OPERATION 8
RGB OFFSET OPERATION 8
COLOR MACRO OPERATION 9
SOUND-OVERRIDE 9
WHITE (OR AMBER) 9
STROBE-OVERRIDE 10
BLACKOUT 10
MANUAL RGBW MODE 10

5. APPENDIX 11

DMX PRIMER 11
GENERAL TROUBLESHOOTING 11
FIXTURE LINKING 12
DATA CABLING 12
DMX Data Cable 12
CABLE CONNECTORS 12
SETTING THE STARTING ADDRESS 13
3-Pin to 5-Pin Conversion Chart 13
Setting up a DMX Serial Data Link 13
GENERAL MAINTENANCE 14
RETURNS PROCEDURE 14
CLAIMS 14

TECHNICAL SPECIFICATIONS 15

CONTACT US 16

CHAUVET®, 2010, All Rights Reserved
Information and specifications in this User Manual are subject to change without notice.
CHAUVET® assumes no responsibility or liability for any errors or inaccuracies that may appear in this manual.

Author: Anthony Chiappone
Revision: 01c
Release Date: 10-28-2010

1. BEFORE YOU BEGIN

What is included

- 1 x Obey™ 4
- 1 x Power Supply
- 1 x Warranty Card
- 1 x User Manual

Unpacking Instructions

Immediately upon receiving a fixture, carefully unpack the carton, check the contents to ensure that all parts are present, and have been received in good condition. Notify the shipper immediately and retain packing material for inspection if any parts appear damaged from shipping or the carton itself shows signs of mishandling. Save the carton and all packing materials. In the event that a fixture must be returned to the factory, it is important that the fixture be returned in the original factory box and packing.

Manual Conventions

CHAUVET® manuals use the following conventions to differentiate certain types of information from the regular text.

CONVENTION	MEANING
[10]	A DIP switch to be configured
<Menu>	A key to be pressed on the fixture's control panel
1~512	A range of values
50/60	A set of values of which only one can be chosen
Settings	A menu option not to be modified (for example, showing the operating mode/current status)
MENU > Settings	A sequence of menu options to be followed
ON	A value to be entered or selected

Icons

This manual uses the following icons to indicate information that requires special attention on the part of the user.

ICONS	MEANING
	This paragraph contains critical installation, configuration or operation information. Failure to comply with this information may render the fixture partially or completely inoperative, cause damage to the fixture or cause harm to the user.
	This paragraph contains important installation or configuration information. Failure to comply with this information may prevent the fixture from functioning correctly.
	This paragraph reminds you of useful, although not critical, information.

Safety Instructions

Please read these instructions carefully. It includes important information about the installation, usage and maintenance of this product.

- Please keep this User Manual for future consultation. If you sell the unit to another user, be sure that they also receive this instruction booklet.
- Always make sure that you are connecting to the proper voltage, and that the line voltage you are connecting to is not higher than that stated on the decal or rear panel of the fixture.
- This product is intended for indoor use only! To prevent risk of fire or shock, do not expose fixture to rain or moisture.
- Make sure there are no flammable materials close to the unit while operating.
- The unit must be installed in a location with adequate ventilation, at least 20 in (50 cm) from adjacent surfaces. Be sure that no ventilation slots are blocked.
- Always disconnect from power source before servicing or replacing fuse and be sure to replace with same fuse source.
- Secure fixture to fastening device using a safety chain.
- Maximum ambient temperature (Ta) is 104° F (40° C). Do not operate fixture at temperatures higher than this.
- In the event of a serious operating problem, stop using the unit immediately. Never try to repair the unit by yourself. Repairs carried out by unskilled people can lead to damage or malfunction. Please contact the nearest authorized technical assistance center.
- Never connect the device to a dimmer pack.
- Make sure the power cord is never crimped or damaged.
- Never disconnect the power cord by pulling or tugging on the cord.
- Never carry the fixture directly from the cord. Always use the hanging/mounting bracket.
- Avoid direct eye exposure to the light source while it is on.

2. INTRODUCTION

Features

- Compact DMX-512 controller for LED fixtures (up to 4-channels)
  - Channel 1: red
  - Channel 2: green
  - Channel 3: blue
  - Channel 4: white (or amber)
- Controls up to 4 separate fixtures
- Each fixture can be in different playback modes simultaneously
- Playback options include automated, sound-activated or manual RGBW
- Playback modes:
  - Preset: 9 built-in colors
  - Chases: manually trigger automated programs
  - Color macro: manually scroll through the color spectrum
  - RGB fade: automatically scroll through the color spectrum
  - RGB fade delay: automatically scroll through the color spectrum with a small delay to each fixture
  - Auto: randomly selects different colors for each fixture
- Variable fade times for all playback modes
- Variable strobing on the fly (2 Hz – 33 Hz)
- Adjustable blackout allows fixtures to fade in and out
- Adjustable audio sensitivity

Product Overview

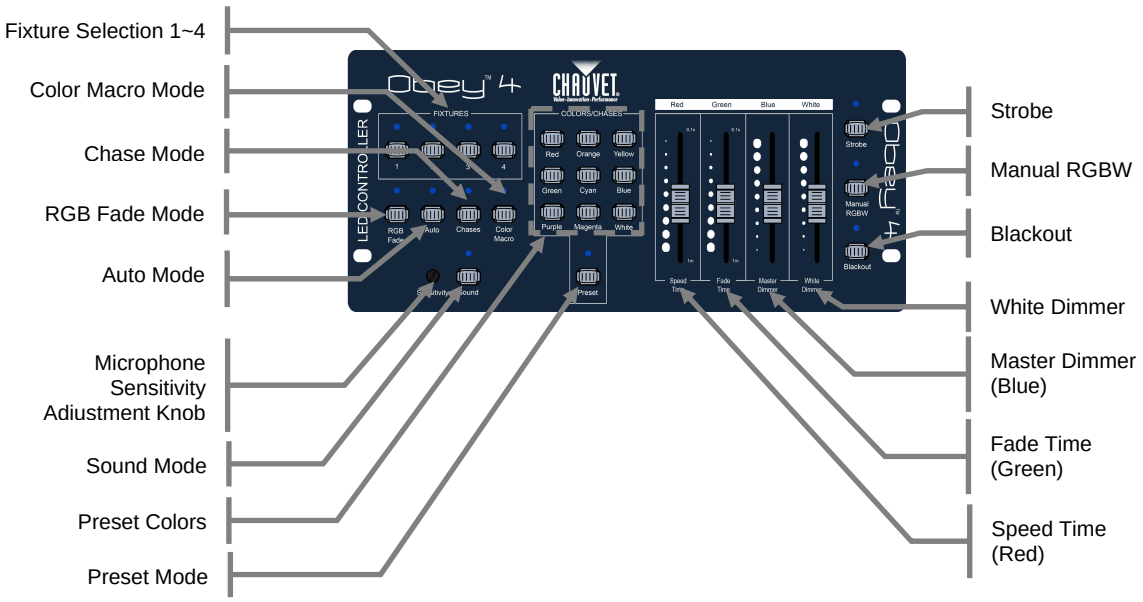

Back Panel

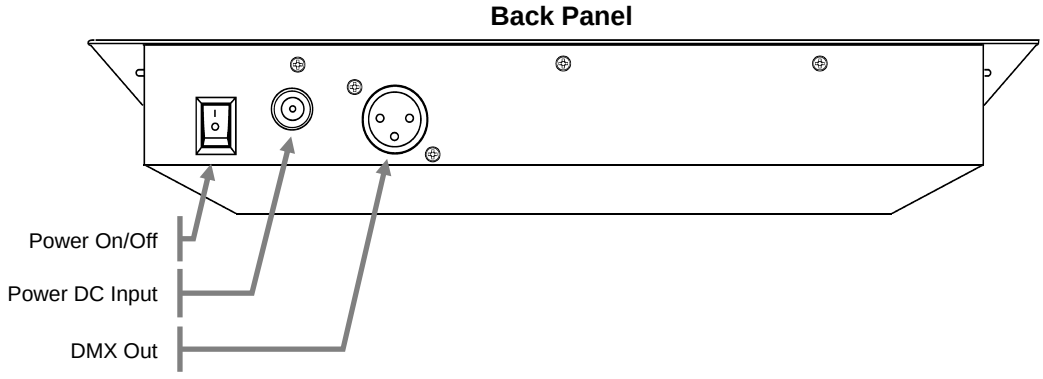

3. SETUP

AC Power

This fixture runs on 12 VDC, 500 mA. Before powering on the unit, check the output of the power supply to be sure that it is correct.

To determine the power requirements for a particular fixture, see the label affixed to the back plate of the fixture or refer to the fixture's specifications chart. A fixture's listed current rating indicates its average current draw under normal conditions.

Always connect the fixture to a switched circuit. Never connect the fixture to a rheostat (variable resistor) or dimmer circuit, even if the rheostat or dimmer channel is used only as a 0 to 100% switch.

Always connect the fixture to a circuit with a suitable electrical ground.

Mounting

Orientation

The Obey™ 4 may be mounted in any safe position.

Installation

Please see the drawing below, which shows the back of the controller. It details the dimensions for mounting. This will aid in placing the holes for installation.

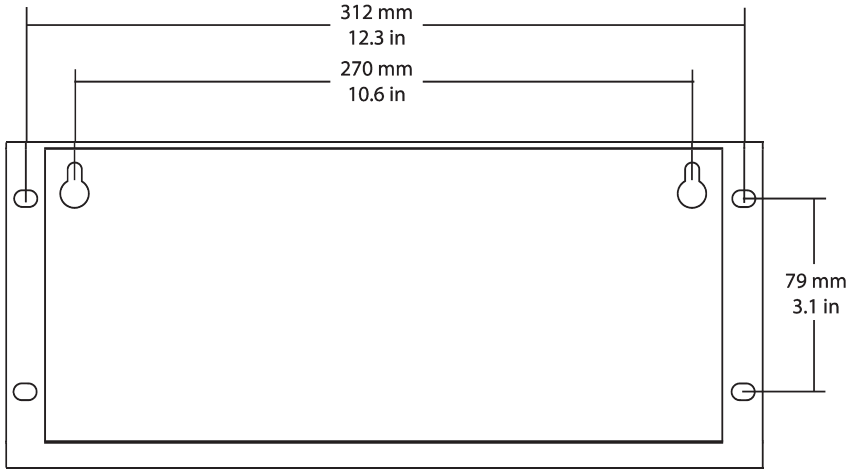

Fixture Addressing

The Obey™ 4 can control up to 4 separate fixtures. Each fixture must be set to predetermined DMX addresses. Please see the chart below for the DMX starting addresses of each of the four **<FIXTURES>.**

Fixture 1: 1 - DIP switch assignment [1]
Fixture 2: 5 - DIP switch assignment [1, 3]
Fixture 3: 9 - DIP switch assignment [1, 4]
Fixture 4: 13 - DIP switch assignment [1, 3, 4]

4. OPERATING INSTRUCTIONS

Please note: the white/amber fader works independently of the current operating mode. Only blackout will effect on this channel.

Preset Operation

This controller has preset colors. There are nine preset colors to choose from, which may be accessed using the nine preset buttons. Please see the instructions below for this operation.

1. Select one or more **<FIXTURES>**.
2. Press **<PRESET>** until the appropriate LED indicator lights.
3. Adjust the **<FADE TIME>** to the desired level to set the Fade Time.
4. Adjust the **<MASTER DIMMER>** to the desired level to set the intensity.
5. **<WHITE DIMMER>** may be adjusted; however, it will not be affected by this mode.
6. Select one of the nine **<PRESET COLOR>** buttons.

Please be sure that the Strobe or Blackout functions are not overriding the controls.

Sound will not function in Preset Mode.

RGB Fade Operation

This controller has a preset color fading program, which will fade all units in unison between colors. Please see the instructions below for this operation.

1. Select one or more **<FIXTURES>**.
2. Press **<RGB FADE>** until the appropriate LED indicator lights.
3. Adjust the **<SPEED TIME>** to the desired level to set the speed time.
4. Adjust the **<FADE TIME>** to the desired level to set the fade time.
5. Adjust the **<MASTER DIMMER>** to the desired level to set the intensity.
7. **<WHITE DIMMER>** may be adjusted; however, it will not be affected by this mode.

Please be sure that the Strobe & Blackout functions are not overriding the controls.

Sound will function in RGB Fade Mode.

Auto Operation

This controller has built-in automatic programs, which will change each unit independently, between random colors. Please see the instructions below for this operation.

1. Select one or more **<FIXTURES>**.
2. Press **<AUTO>** until the appropriate LED indicator lights.
3. Adjust the **<SPEED TIME>** to the desired level to set the speed time.
4. Adjust the **<FADE TIME>** to the desired level to set the fade time.
5. Adjust the **<MASTER DIMMER>** to the desired level to set the intensity.
6. **<WHITE DIMMER>** may be adjusted; however, it will not be affected by this mode.

Please be sure that the Strobe & Blackout functions are not overriding the controls.

The fixtures in this mode will not be the same color. Each fixture will operate on a random color.

Sound will function in Auto Mode.

Chase Operation

This controller has preset color chases. There are several color combinations to choose from. Please see the instructions below for this operation.

1. Select one or more **<FIXTURES>**.
2. Press **<CHASES>** until the appropriate LED indicator lights.
3. Use the **<PRESET COLORS>** to select a chase. *See the chart below for a description on which button triggers which chase.*
4. Adjust the **<SPEED TIME>** to the desired level to set the speed time.
5. Adjust the **<FADE TIME>** to the desired level to set the fade time.
6. Adjust the **<MASTER DIMMER>** to the desired level to set the intensity.
7. **<WHITE DIMMER>** may be adjusted; however, it will not be affected by this mode.

Chase Selection

Use the following **<PRESET COLORS>** to select the corresponding chase.

Red:	Red/Green
Orange:	Green/Blue
Yellow:	Red/Blue
Green:	Red/Cyan
Cyan:	Green/Magenta
Blue:	Yellow/Blue
Purple:	White/Blackout
Magenta:	Color Cycle
White:	Yellow/Magenta

Please be sure that the Strobe & Blackout functions are not overriding the controls.

Sound will function in Chase Mode.

RGB Offset Operation

This controller has a built-in color fade program that will chase between fixtures sequentially: 1~4, continuously Please see the instructions below for this operation.

1. Press **<RGB FADE> & <AUTO**> simultaneously.
2. Adjust the **<SPEED TIME>** to the desired level to set the speed time.
3. Adjust the **<FADE TIME>** to the desired level to set the fade time.
4. Adjust the **<MASTER DIMMER>** to the desired level to set the intensity.
5. **<WHITE DIMMER>** may be adjusted; however, it will not be affected by this mode.

Sound will function in RGB Offset Mode.

Please be sure that the Strobe & Blackout functions are not overriding the controls.

Color Macro Operation

This controller has preset color macros, some with different intensities. Please see the instructions below for this operation.

1. Select one or more **<FIXTURES>**.
2. Press **<COLOR MACRO>** until the appropriate LED indicator lights.
3. Move the **<SPEED TIME>** fader to select the color.
4. Adjust the **<FADE TIME>** to the desired level to set the fade time.
5. Adjust the **<MASTER DIMMER>** to the desired level to set the intensity.
6. Adjust the **<WHITE DIMMER>** to the desired level to set the white intensity.

This mode applies the same color to all fixtures.

Sound will NOT function in Color Macro Mode.

Sound-Override

The modes in this controller that have multiple steps are normally triggered using the **<SPEED TIME>** fader. However, they can be triggered using the built-in microphone, as well.

Sound-Override mode will **ONLY** work in one of the following modes:

- **RGB Fade**
- **AUTO**
- **CHASES**

Please see the following steps for operation.

1. Press **<SOUND>** until the LED indicator lights.
2. Adjust the sound sensitivity by rotating the **<MICROPHONE SENSITIVITY ADJUSTMENT KNOB>**.

White (or amber)

The **<WHITE DIMMER>** fader on this controller operates entirely on its own, regardless of the active operating mode.

The only functions that effect the White (or amber) color are **<BLACKOUT>** and **<STROBE>.**

Strobe-Override

One of the functions for the **<SPEED TIME>** fader is the strobe-override function. It will work in all operating modes.

Please see the instructions below for this operation.

1. Select one or more **<FIXTURES>**.
2. **See note below about RGBW Operation.**
3. Press **<STROBE>** until the appropriate LED indicator lights.
4. Adjust **<SPEED TIME>** to the desired level.
5. In order to return to the desired mode, press **<STROBE>** until the appropriate LED indicator is off.

In order to deactivate this function for a single fixture, <STROBE> must be activated, and <FADE TIME> must be set to 0.1M (fully down). Then, deactivate <STROBE> (the LED indicator will turn OFF).

Strobe-Override will only affect fixtures that are selected.

Double-tap <STROBE> at any time to deactivate strobing for all fixtures!

If the fixture is in RGBW Operation, the faders must be adjusted above 0% in order for the strobe to function.

Blackout

This controller has a dedicated blackout button. This button works in conjunction with the **<FADE TIME>** fader. Please see the instructions below for this operation.

1. Select one or more **<FIXTURES>**.
2. Adjust the **<FADE TIME>** fader to the desired value to determine how quickly the lights will fade out.
3. Press **<BLACKOUT>** until the appropriate LED indicator lights.

The blackout function will also work with the* <FADE TIME> *fader when disabling the blackout.

The fading blackout function will not work when the controller is in Manual RGBW mode.

Double-tap <BLACKOUT> to instantly blackout all fixtures, regardless of what is selected, according to the <FADE TIME> value.

Manual RGBW Mode

This controller has the ability to manually choose a custom color combination by simply using the Red, Green Blue, and White faders. However, **<MANUAL RGBW>** must first be pressed. Please see the instructions below for this operation.

1. Select one or more **<FIXTURES>**.
2. Press **<MANUAL RGBW>** until the appropriate LED indicator lights.
3. Adjust the Red, Green, Blue, and White faders to the desired levels.

Blackout dimming speed will not work in Manual RGBW mode. When <BLACKOUT> is pressed, the lights selected will immediately turn off.

Speed/Fade Time will not work in Manual RGBW mode.

5. APPENDIX

DMX Primer

There are 512 channels in a DMX connection. Channels may be assigned in any manner. A fixture capable of receiving DMX will require one or a number of sequential channels. The user must assign a starting address on the fixture that indicates the first channel reserved in the controller. There are many different types of DMX controllable fixtures and they all may vary in the total number of channels required. Choosing a start address should be planned in advance. Channels should never overlap. If they do, this will result in erratic operation of the fixtures whose starting address is set incorrectly. You can however, control multiple fixtures of the same type using the same starting address as long as the intended result is that of unison movement or operation. In other words, the fixtures will be slaved together and all respond exactly the same.

DMX fixtures are designed to receive data through a serial Daisy Chain. A Daisy Chain connection is where the DATA OUT of one fixture connects to the DATA IN of the next fixture. The order in which the fixtures are connected is not important and has no effect on how a controller communicates to each fixture. Use an order that provides for the easiest and most direct cabling. Connect fixtures using shielded two conductor twisted pair cable with three pin XLR male to female connectors. The shield connection is pin 1, while pin 2 is Data Negative (S-) and pin 3 is Data positive (S+).

General Troubleshooting

SYMPTOM	POSSIBLE CAUSE(S)	POSSIBLE ACTION(S)
Breaker/Fuse keeps blowing	• Excessive circuit load	• Check total load placed on the electrical circuit.
	• Short circuit along the power wires	• Check for a short in the electrical wiring (internal and/or external).
Device does not power up	• No power	• Check for power on Mains.
	• Loose power cord	• Check power cord
Fixture is not responding to DMX	• Wrong DMX addressing	• Check Control Panel and unit addressing
	• Damaged DMX cables	• Check DMX cables
	• Wrong polarity settings on the controller	• Check polarity switch settings on the controller
	• Loose DMX cables	• Check cable connections
	• Faulty DMX interface	• Replace DMX input
	• Faulty Main PCB	• Replace Main PCB
Loss of signal	• Non DMX cables	• Use only DMX compatible cables
	• Bouncing signals	• Install terminator as suggested.
	• Long cable / Low level signal	• Install amplifier right after fixture with strong signal.
	• Too many fixtures	• Install an optically coupled DMX splitter after unit #32.
	• Interference from AC wires	• Keep DMX cables separated from power cables or black lights.

If you still have a problem after trying the above solutions, please contact CHAUVET® Technical Support.

Fixture Linking

You will need a serial data link to run light shows of one or more fixtures using a DMX controller or to run synchronized shows on two or more fixtures set to a master/slave operating mode. The combined number of channels required by all the fixtures on a serial data link determines the number of fixtures the data link can support.

Fixtures on a serial data link must be daisy chained in one single line. To comply with the EIA-485 standard, no more than 32 fixtures should be connected on one data link. Connecting more than 32 fixtures on one serial data link without the use of a DMX optically-isolated splitter may result in deterioration of the digital DMX signal.

Maximum recommended serial data link distance: 500 m (1640 ft)
Maximum recommended number of fixtures on a serial data link: 32

Data Cabling

To link fixtures together you must obtain data cables. You can purchase CHAUVET® certified DMX cables directly from a dealer/distributor or construct your own cable. If you choose to create your own cable please use data-grade cables that can carry a high quality signal and are less prone to electromagnetic interference.

DMX Data Cable

Use a Belden© 9841 or equivalent cable which meets the specifications for EIA RS-485 applications. Standard microphone cables cannot transmit DMX data reliably over long distances. The cable must have the following characteristics:

Type:	*shielded, 2-conductor twisted pair*
Maximum capacitance between conductors:	*30 pF/ft*
Maximum capacitance between conductor and shield:	*55 pF/ft*
Maximum resistance:	*20 ohms/1000 ft*
Nominal impedance:	*100 ~ 140 ohms*

Cable Connectors

Cabling must have a male XLR connector on one end and a female XLR connector on the other end.

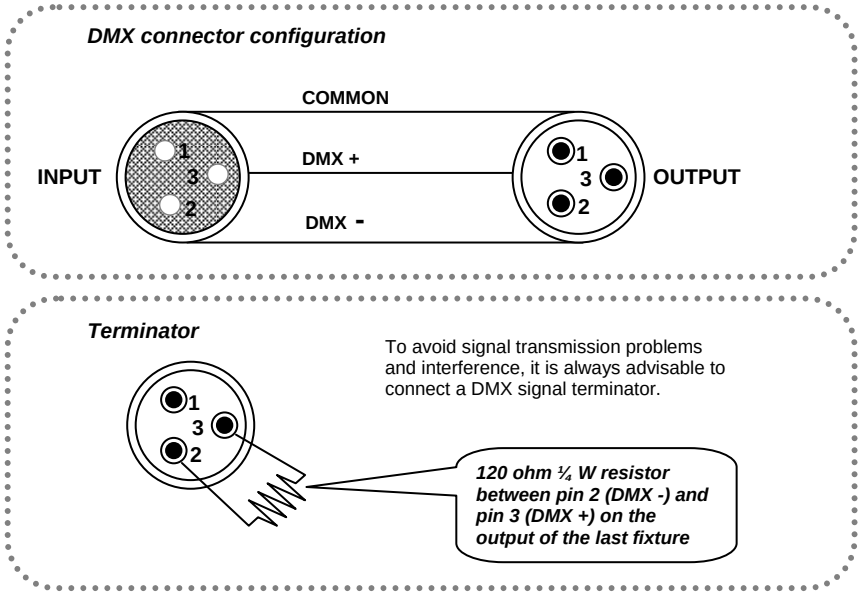

Do not allow contact between the common and the fixture's chassis ground. Grounding the common can cause a ground loop, and your fixture may perform erratically. Test cables with an ohm meter to verify correct polarity and to make sure the pins are not

grounded or shorted to the shield or each other.

Setting the Starting Address

This DMX mode enables the use of a universal DMX controller device. Each fixture requires a start address from 1~512. A fixture requiring one or more channels for control begins to read the data on the channel indicated by the start address. For example, a fixture that uses six DMX channels and was addressed to start on DMX channel 100, would read data from channels: 100, 101, 102, 103, 104, and 105. Choose start addresses so that the channels used do not overlap, and note the start address selected for future reference.

If this is your first time addressing a fixture using the DMX control protocol, we suggest jumping to the “Appendix” section and reading the heading “DMX Primer”. It contains very useful information that will help you understand its use.

3-Pin to 5-Pin Conversion Chart

If you use a controller with a 5-pin DMX output connector, you will need to use a 5-pin to 3-pin adapter. The chart below details a proper cable conversion:

3-PIN TO 5-PIN CONVERSION CHART

Conductor	3-Pin Female (Output)	5-Pin Male (Input)
Ground/Shield	Pin 1	Pin 1
Data (-) signal	Pin 2	Pin 2
Data (+) signal	Pin 3	Pin 3
Not used		Pin 4
Not used		Pin 5

Setting up a DMX Serial Data Link

1. Connect the (male) 3-pin connector side of the DMX cable to the output (female) 3-pin connector of the controller.
2. Connect the end of the cable coming from the controller which will have a (female) 3-pin connector to the input connector of the next fixture consisting of a (male) 3-pin connector.
3. Then, proceed to connect from the output as stated above to the input of the following fixture and so on.

Universal DMX Controller

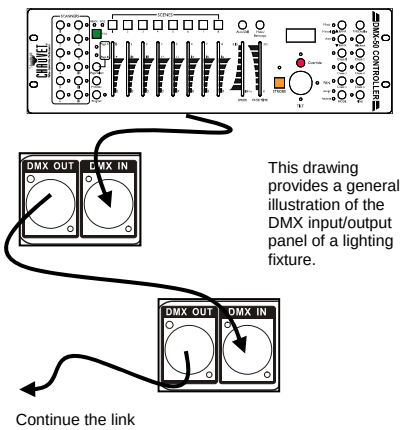

This drawing provides a general illustration of the DMX input/output panel of a lighting fixture.

General Maintenance

To maintain optimum performance and minimize wear, fixtures should be cleaned frequently. Usage and environment are contributing factors in determining frequency. As a general rule, fixtures should be cleaned at least twice a month. Dust build up reduces light output performance and can cause overheating. This can lead to reduced lamp life and increased mechanical wear. Be sure to power off fixture before conducting maintenance.

1. Unplug fixture from power.
2. Use a vacuum or air compressor and a soft brush to remove dust collected on external vents.
3. Clean all glass when the fixture is cold with a mild solution of glass cleaner or Isopropyl Alcohol and a soft lint free cotton cloth or lens tissue.
4. Apply solution to the cloth or tissue and drag dirt and grime to the outside of the lens.
5. Gently polish optical surfaces until they are free of haze and lint.

The cleaning of external optical lenses and/or mirrors must be carried out periodically to optimize light output. Cleaning frequency depends on the environment in which the fixture operates. Damp, smoky or particularly dirty surroundings can cause greater accumulation of dirt on the unit's optics. Clean with soft cloth using normal glass cleaning fluid. Clean the external optics at least every 20 days. Clean the fixture at least every 30/60 days.

Always dry the parts carefully after cleaning them.

Never spin a fan using compressed air.

Returns Procedure

Returned merchandise must be sent prepaid and in the original packing; call tags will not be issued. Package must be clearly labeled with a Return Merchandize Authorization Number (RMA #). Products returned without the RMA # will be refused. Call CHAUVET and request an RMA # prior to shipping the fixture. Be prepared to provide the model number, serial number and a brief description of the cause for the return. Be sure to pack fixture properly; any shipping damage resulting from inadequate packaging is the customer's responsibility. As a suggestion, proper UPS packing or double-boxing is always a safe method to use. CHAUVET reserves the right to use its own discretion to repair or replace product(s).

If you are given an RMA #, please include the following information on a piece of paper inside the box:

1) Your name
2) Your address
3) Your phone number
4) The RMA #
5) ***A brief description of the symptoms***

Claims

Damage incurred in shipping is the responsibility of the shipper; therefore, the damage must be reported to the carrier upon receipt of merchandise. It is the customer's responsibility to notify and submit claims with the shipper in the event that a fixture is damaged due to shipping. Any other claim for items such as missing component/part, damage not related to shipping, and concealed damage, must be made within seven (7) days of receiving merchandise.

TECHNICAL SPECIFICATIONS

WEIGHT & DIMENSIONS

Length	12.8 in (325 mm)
Width	5.5 in (140 mm)
Height	2.1 in (52 mm)
Weight	3 lbs (1.4 kg)

POWER

Operating Range	DC 12 V, 500 mA max
Adapter (external power supply: 100~240 VAC, 50/60 Hz)	Provided

INDOOR/OUTDOOR

Rating	For indoor use only

THERMAL

Maximum ambient temperature	104° F (40° C)

CONTROL & PROGRAMMING

Data Output	3-pin XLR female socket
Data pin configuration	pin 1 shield, pin 2 (-), pin 3 (+)
Protocols	DMX-512 USITT
DMX control channels	001~016

ORDERING INFORMATION

Obey™ 4	OBEY4

WARRANTY INFORMATION

Warranty	2-year limited warranty

CONTACT US

World Wide

General Information

CHAUVET®
5200 NW 108th Ave
Sunrise, FL 33351
voice: 954.929.1115
fax: 954.929.5560
toll free: 800.762.1084

Technical Support

CHAUVET®
5200 NW 108th Ave
Sunrise, FL 33351
voice: 954.929.1115 **(Press 4)**
fax: 954.929.5560 **(Attention: Service)**

World Wide Web

www.chauvetlighting.com