K for MUSICIANS

SOLUTIONS

KEYBOARD

QSC™

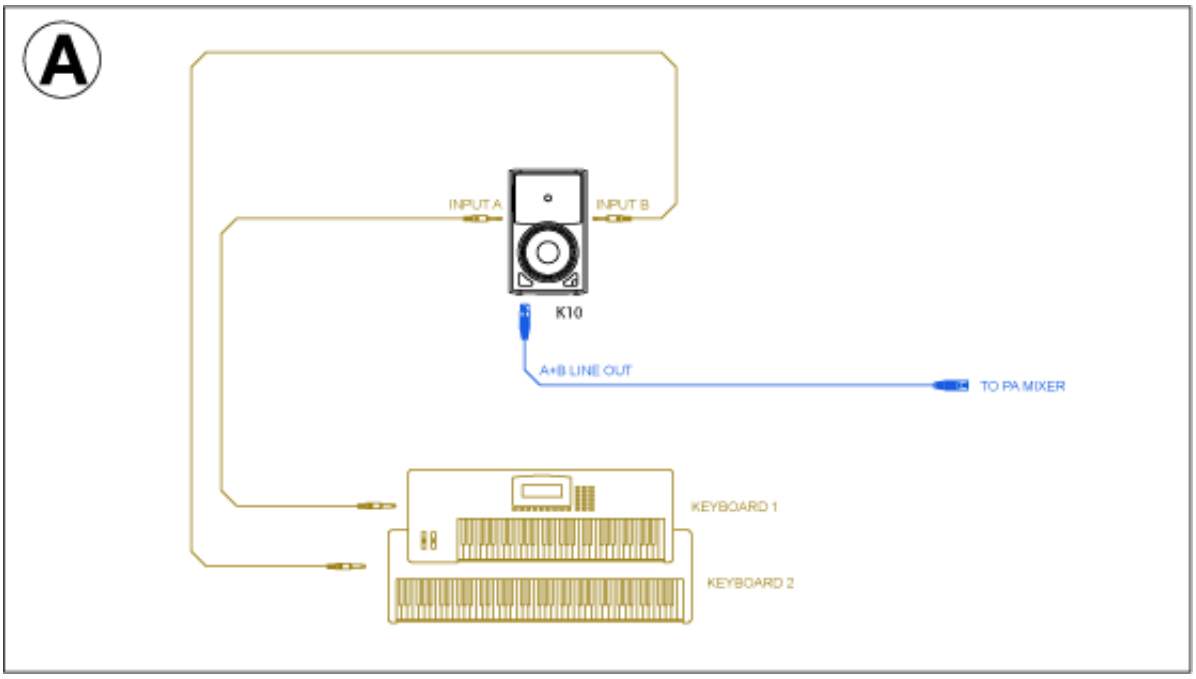

A. Dual Keyboards - single K/KW loudspeaker, with mono sub-mix “to” main PA

This diagram illustrates how two keyboards can be sub-mixed using a single K/KW loudspeaker. Directions: Using the mono jack output from each keyboard, connect one to Line Input A and the other to Line Input B. If you are also connecting to the main PA Mixer, the A+B Line Output provides a balanced mix of both keyboards on a single XLR mic cable.

Caution – ensure that the Mic/Line switch on Line Input A is set to “LINE” (“0” on KW models).

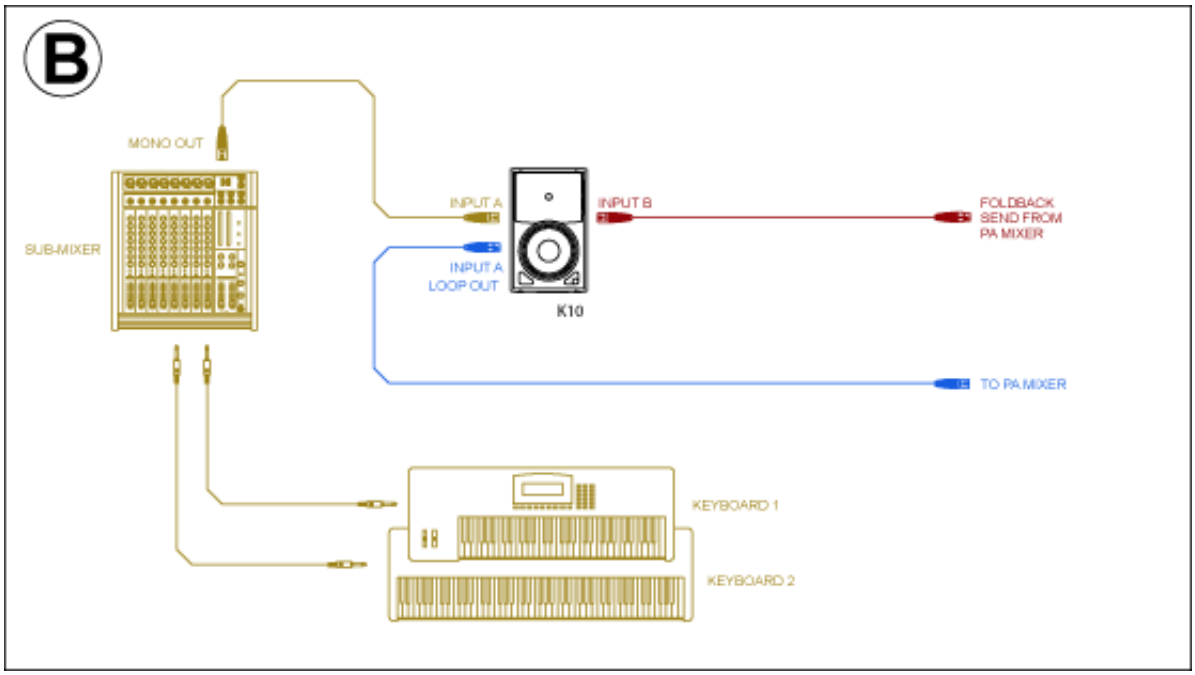

B. Dual Keyboards - single K/KW loudspeaker, with mono fold-back send “from” PA

This diagram illustrates how two keyboards can be sub-mixed into a single K/KW loudspeaker AND send a balanced mono feed the main PA Mixer, while simultaneously receiving a discreet fold-back “mix” from the PA mixer.
Directions: Using the mono jack output from each keyboard, connect to a small portable mixer, then connect the mixer to Line Input A. If you use a balanced XLR or TRS output from the portable mixer, then the balancing feature will “LOOP THRU” to the PA Mixer, reducing buzz and hum. Connect the PA Mixer “fold-back” send to Line Input B, then adjust your level balance to suit.

Caution: ensure that the Mic/Line switch on Line Input A is set to “LINE” (“0” on KW models).

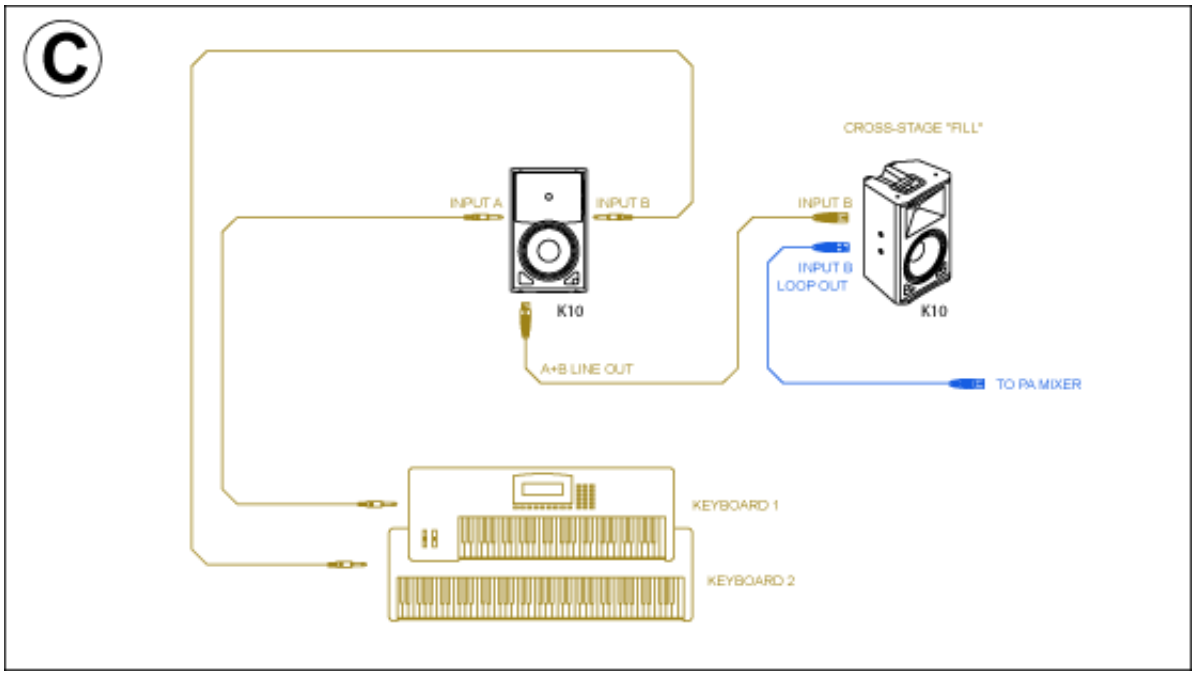

C. Dual Keyboards - single K/KW loudspeaker for stage amplification, single K/KW for stage "fill"

This diagram illustrates how two keyboards can be sub-mixed using a single K/KW loudspeaker, while simultaneously feeding a "Stage-fill" K/KW loudspeaker for the rest of the band, plus feeding the main PA Mixer.
Directions: Using the mono jack output from each keyboard, connect one to Line Input A and the other to Line Input B. The A+B Line Out provides a balanced mix of both keyboards on a single XLR cable. Connect this balanced Line Out to Line Input B of your "Stage-Fill" loudspeaker, then adjust your stage level to suit. Because you are sending a balanced signal into Line Input B, then the balancing feature will "LOOP THRU" to the PA Mixer reducing buzz and hum.

Caution: ensure that the Mic/Line switch on Line Input A is set to "LINE" ("0" on KW models).

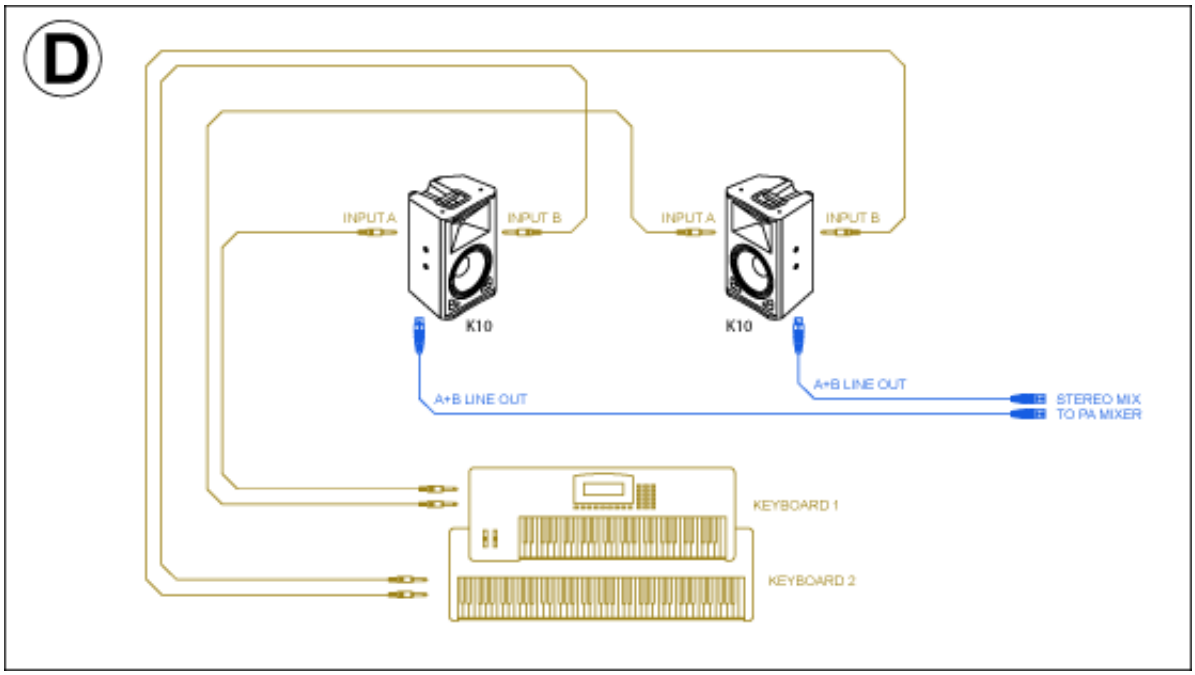

D. Dual Keyboards – stereo K/KW loudspeakers, with stereo sub-mix "to" main PA

This diagram illustrates how two keyboards can be sub-mixed in stereo using two K/KW stage loudspeakers, while simultaneously sending a balanced stereo feed the main PA Mixer.
Directions: Using the stereo jack outputs from each keyboard, connect both "Left" outputs to Line Input A & B on the Left K/KW loudspeaker, and both "Right" outputs to Line Input A+B on the right K/KW Loudspeaker. This will ensure that any stereo chorus, leslie, ping-pong effects etc will be heard on stage in pure stereo. If you are also connecting to the main PA Mixer, the A+B Line Outputs of each loudspeaker provides a balanced mix of both keyboards (in pure stereo) on a pair of XLR mic cables.

Caution: ensure that the Mic/Line switch on Line Input A is set to "LINE" ("0" on KW models).

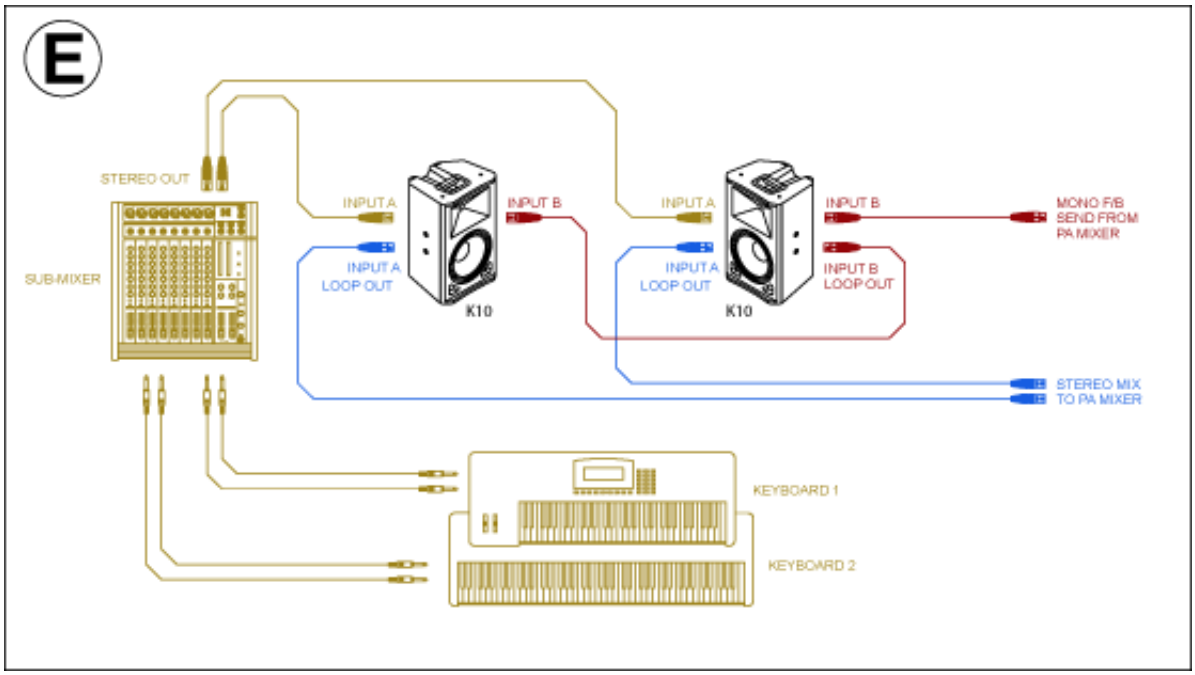

E. Dual Keyboards - stereo K/KW loudspeakers, with mono fold-back send "from" PA

This diagram illustrates how two keyboards can be sub-mixed in stereo into two K/KW stage loudspeakers AND send a balanced stereo feed the main PA Mixer, while simultaneously receiving a discreet fold-back "mix" from the PA mixer.
Directions: Using the stereo jack outputs from each keyboard, connect to a small stereo portable mixer, then connect the Left Output of the mixer into Line Input A of the Left K/KW loudspeaker and the Right Output of the Mixer into Line Input A of the Right K/KW loudspeaker. If you use a balanced XLR or TRS outputs from the portable mixer, then the balancing feature will "LOOP THRU" to the main PA Mixer, reducing buzz and hum. Connect the PA Mixer "fold-back" send to Line Input B of one K/KW loudspeaker, and simply LOOP THRU to Line Input B of the other K/KW loudspeaker, then adjust your level balance to suit.

Caution: ensure that the Mic/Line switch on Line Input A is set to "LINE" ("0" on KW models).

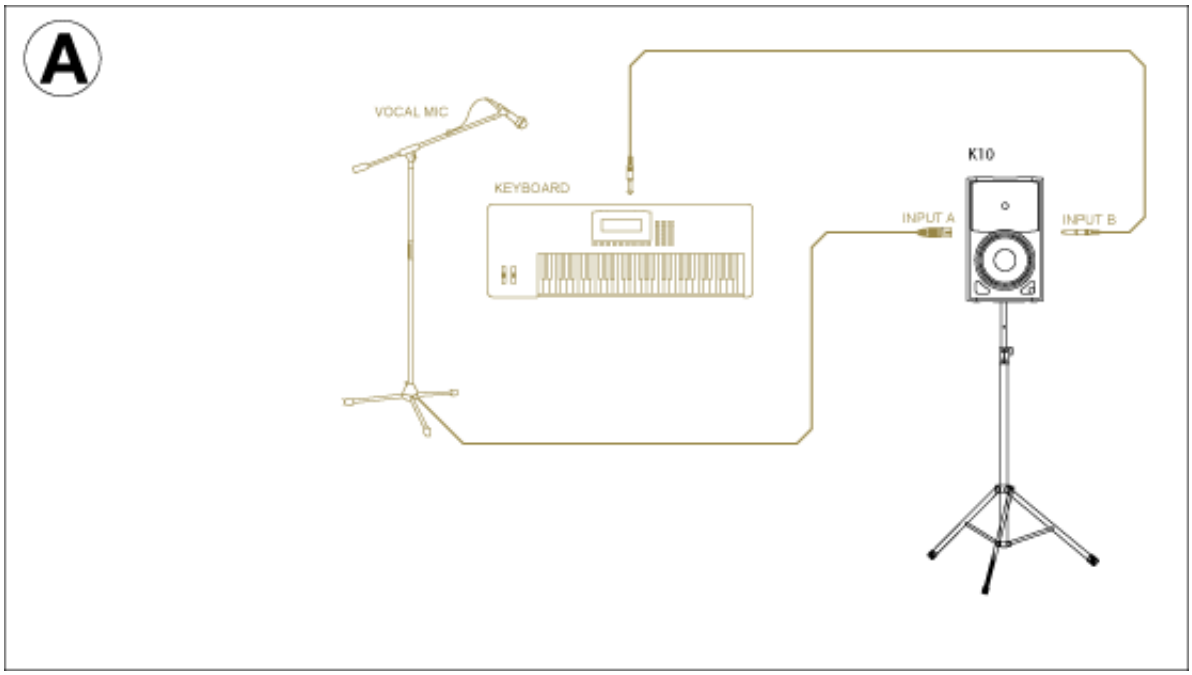

A. Keyboard & Vocal Microphone - single K/KW loudspeaker plus Stage Monitor

This diagram illustrates how a single keyboard and vocal microphone can be sub-mixed using a single K/KW loudspeaker, while simultaneously sending a feed to a K/KW floor monitor.

Directions: Connect the microphone into Mic/Line Input A using a standard XLR-XLR cable. Connect the keyboard into Input B using a standard ¼" Jack – Jack cable. The A+B Line Out provides a balanced mix of both inputs on a single XLR cable. Connect this balanced Line Out to Line Input B of your "Stage -Monitor" loudspeaker, then adjust your stage level to suit.

TIP: For Line sources we recommend using Input B instead of Input A wherever possible as there is zero risk of someone inadvertently changing the input gain from "line" to "mic".

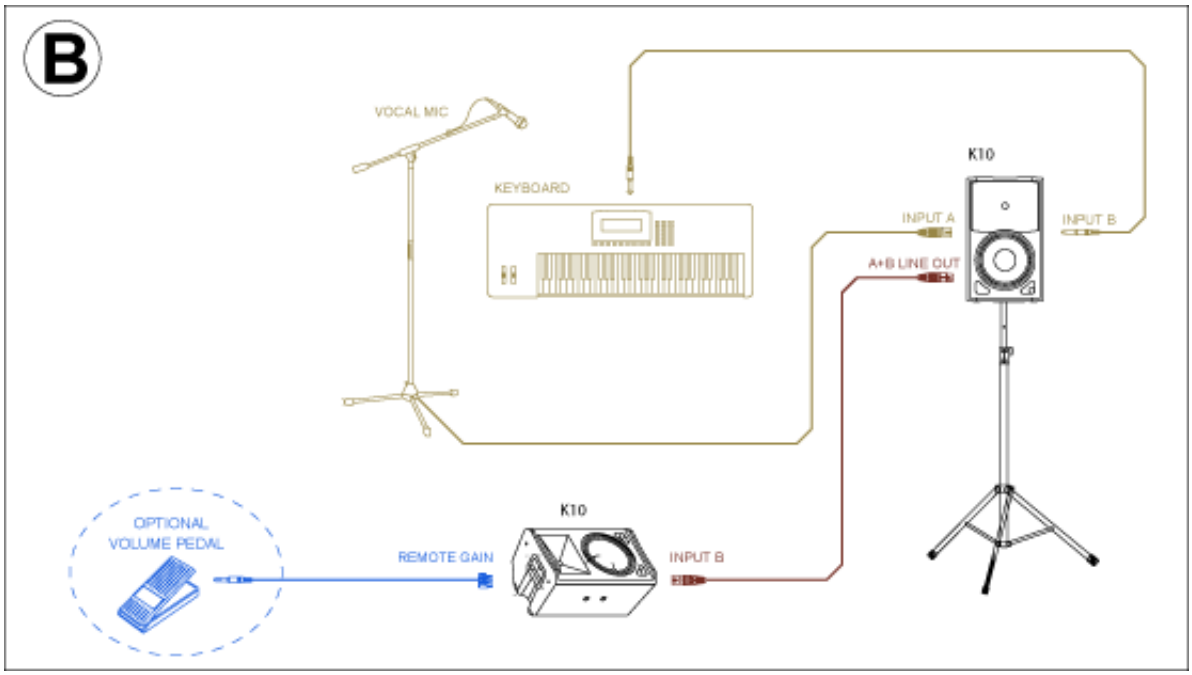

B. Keyboard & Vocal Microphone - single K/KW loudspeaker plus Subwoofer

This diagram illustrates how a single keyboard and vocal microphone can be sub-mixed using a single K/KW loudspeaker, while simultaneously sending a feed to a K/KW Subwoofer.

Directions: Connect the microphone into Mic/Line Input A using a standard XLR-XLR cable. Connect the keyboard into Input B using a standard ¼" Jack – Jack cable. The A+B Line Out provides a balanced mix of both inputs on a single XLR cable. Connect this balanced A+B Line Out to Line Input A of your K/KW Subwoofer, then adjust your stage level to suit.

TIP – ensure that the Mic/Line switch on Line Input A is set to "MIC" (for KW models, select either "24" or "36").

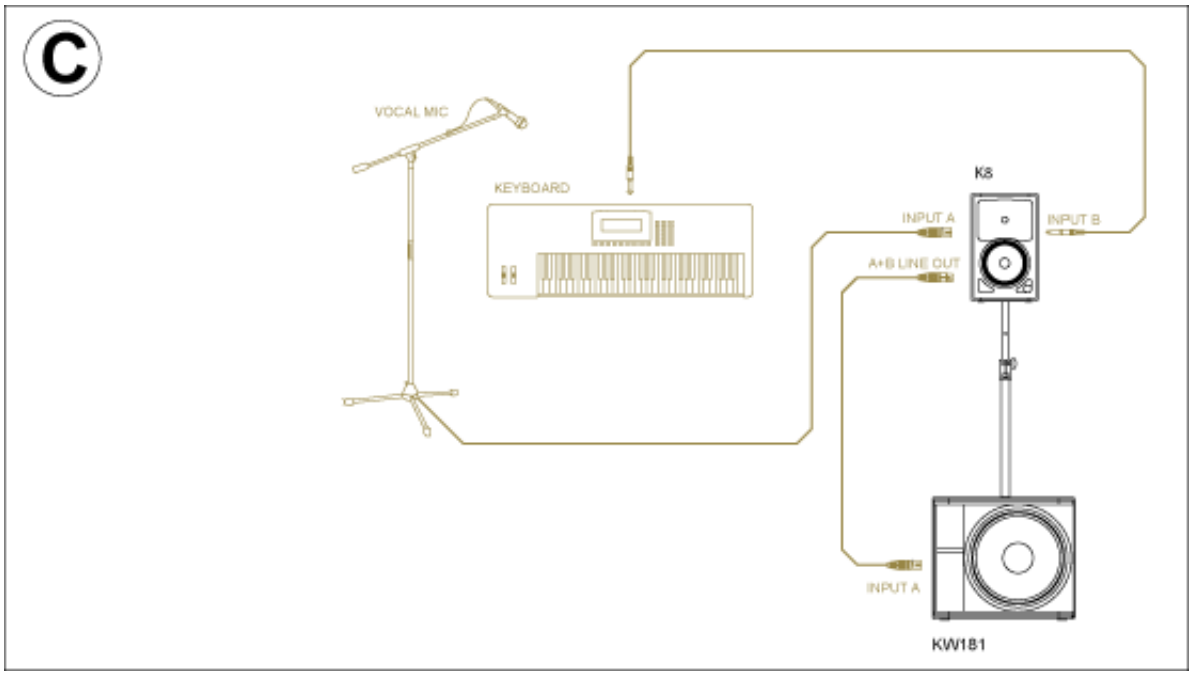

C. Keyboard & Vocal Microphone - single K/KW loudspeaker plus Sub & Stage Monitor

This diagram illustrates how a single keyboard and vocal microphone can be sub-mixed using a single K/KW loudspeaker, while simultaneously sending a feed to a K/KW Subwoofer AND a K/KW stage monitor.

Directions: Connect the microphone into Mic/Line Input A using a standard XLR-XLR cable. Connect the keyboard into Input B using a standard ¼" Jack – Jack cable. The A+B Line Out provides a balanced mix of both inputs on a single XLR cable. Connect this balanced A+B Line Out to Line Input A of your K/KW Subwoofer, then connect the Input A "LOOP THRU" to Line Input B of your K/KW stage monitor. Adjust your stage level to suit.

TIP: For Line sources we recommend using Input B instead of Input A wherever possible as there is zero risk of someone inadvertently changing the input gain from "line" to "mic".

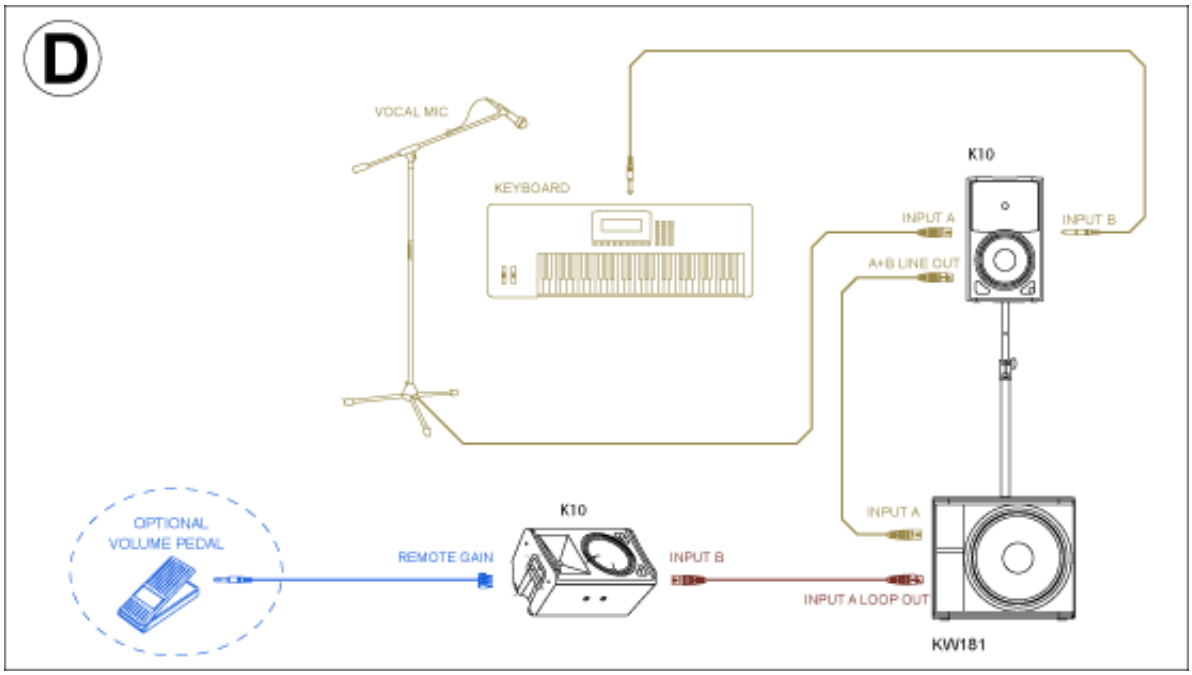

D. Keyboard & Vocal Microphone - stereo K/KW loudspeaker

This diagram illustrates how a stereo keyboard running and a vocal microphone can be sub-mixed using a pair of K/KW loudspeakers.

Directions: Connect the microphone to Mic/Line Input A either K/KW loudspeaker, and using "Input A "LOOP THRU", simply connect to Mic/Line Input A of the other loudspeaker. Using the stereo jack outputs on the keyboard, connect the "Left" output to Line Input B on the left K/KW loudspeaker, and the "Right" output to Line Input B on the right K/KW Loudspeaker. This will ensure that any stereo chorus, leslie, ping-pong effects etc will be heard in pure stereo.

TIP – ensure that the Mic/Line switch on Line Input A is set to "MIC" (for KW models, select either "24" or "36").

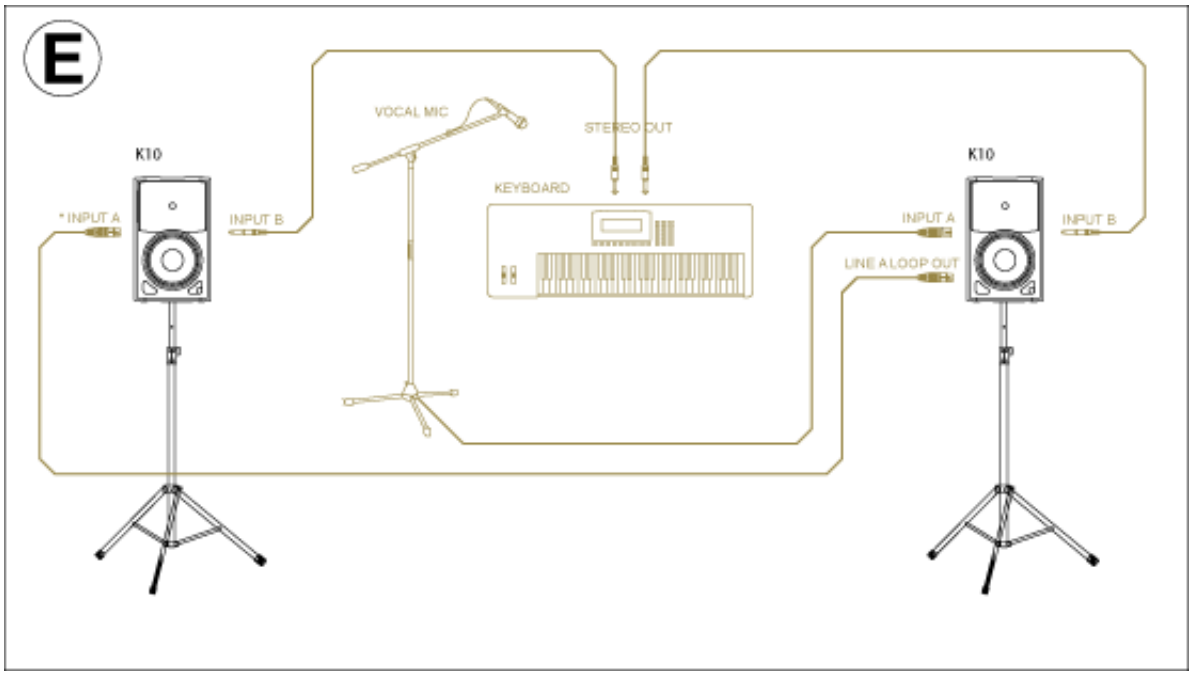

E. Keyboard & Vocal Microphone - stereo K/KW loudspeaker plus Sub and Floor Monitor

This diagram illustrates how a stereo keyboard and a vocal microphone running through stereo harmonizer can both be sub-mixed using a pair of K/KW loudspeakers.

Directions: Using the stereo jack outputs on the Vocal Harmonizer, connect the "Left" output to Line Input A on the left K/KW loudspeaker, and the "Right" output to Line Input A on the right K/KW Loudspeaker. Using the stereo jack outputs on the keyboard, connect the "Left" output to Line Input B on the left K/KW loudspeaker, and the "Right" output to Line Input B on the right K/KW Loudspeaker. This will ensure that any stereo chorus, leslie, ping-pong effects etc will be heard in pure stereo. The A+B Line Out provides a balanced mix of both inputs on a single XLR cable. Connect this balanced A+B Line Out to Line Input A of your K/KW Subwoofer, then connect the Input A "LOOP THRU" to Line Input B of your K/KW stage monitor. Adjust your stage level to suit.

TIP: ensure that the Mic/Line switch on Line Input A is set to "LINE" ("0" on KW models).

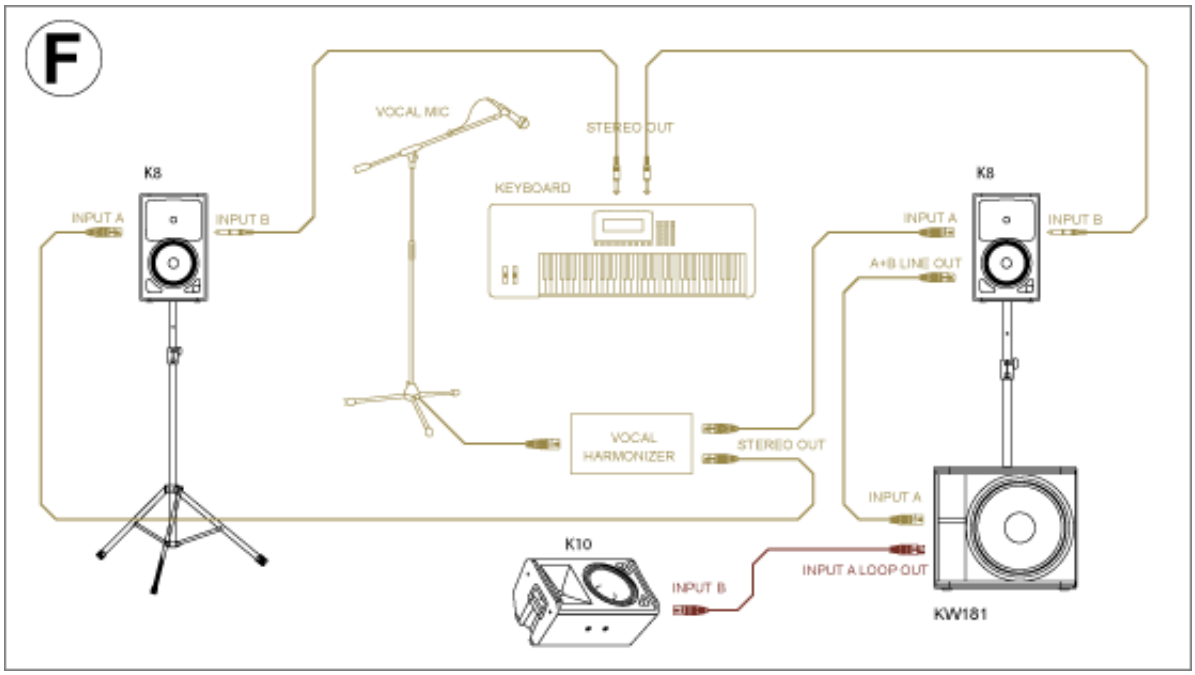

F. Keyboard & Vocal Microphone - stereo K/KW loudspeaker plus Sub and Floor Monitor

This diagram illustrates how a stereo keyboard and a vocal microphone running through stereo harmonizer can both be sub-mixed using a pair of K/KW loudspeakers.

Directions: Using the stereo jack outputs on the Vocal Harmonizer, connect the "Left" output to Line Input A on the left K/KW loudspeaker, and the "Right" output to Line Input A on the right K/KW Loudspeaker. Using the stereo jack outputs on the keyboard, connect the "Left" output to Line Input B on the left K/KW loudspeaker, and the "Right" output to Line Input B on the right K/KW Loudspeaker. This will ensure that any stereo chorus, leslie, ping-pong effects etc will be heard in pure stereo. The A+B Line Out provides a balanced mix of both inputs on a single XLR cable. Connect this balanced A+B Line Out to Line Input A of your K/KW Subwoofer, then connect the Input A "LOOP THRU" to Line Input B of your K/KW stage monitor. Adjust your stage level to suit.

TIP: ensure that the Mic/Line switch on Line Input A is set to "LINE" ("0" on KW models).