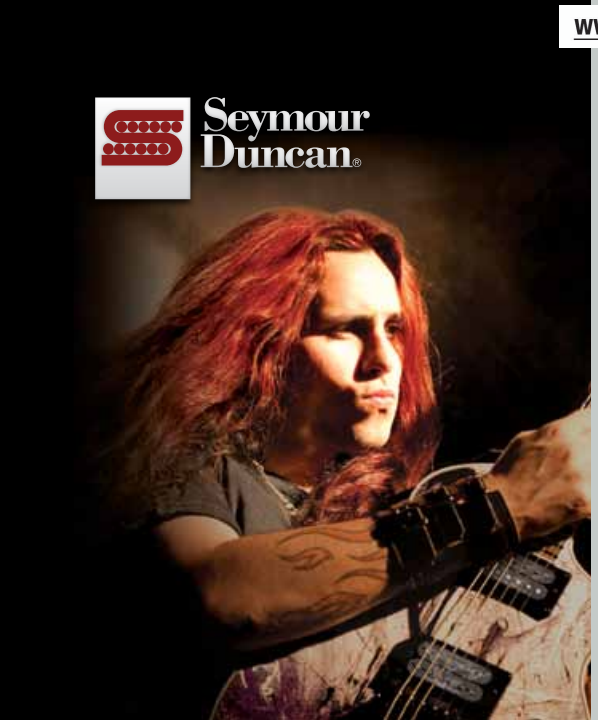

Gus G. FIRE™ Blackouts System

Congratulations on your purchase of the Gus G. FIRE™ Blackouts System. By combining a pair of passive humbuckers with a high-output, low-noise Blackouts™ active preamp, this system blends the rich tone and expressive character of traditional pickups with the power and punch of Blackouts™. It's the most organic-sounding active pickup set you've ever heard.

Wiring Diagram for:

AHB-11S Gus G. FIRE™
Blackouts System

5427 Hollister Ave., Santa Barbara, CA 93111
seymourduncan.com • (805) 964-9610

The Solderless Connector Stations

The System's preamp has two easy-to-use solderless wiring connectors: the ten-station Pickup Connector and the eight-station Output Connector.

The **Pickup Connector** is where you'll insert the bare-wire pickup leads from your passive pickups. Just match the wire colors of the pickups' wires as indicated in these diagrams.

The **Output Connector** is where the preamp connects to the rest of your guitar's controls. **Output 1** and **Output 2** are the hot outputs for your bridge and neck pickups, respectively. The **+9V** station is where you'll connect the red wire from the battery clip.

Connecting wires to the stations is simple: Just insert the bare wire into the station and tighten the screw to lock it into place.

Installing the Preamp

1. Draw a diagram of your guitar's wiring for reference.

2a. If you're migrating from a passive-pickup setup, remove your output jack and all of the volume and tone potentiometers from your guitar. You'll be replacing the jack with the included stereo output jack and replacing your potentiometers with the 25K pots included in this package.

2b. If your guitar already has an active system, remove the battery. Clip and strip the end of the battery clip's red wire, leaving as much wire length extending from the battery clip as possible. Do the same for any output or ground wire that was previously connected to the potentiometer that the new preamp will replace. This will prepare everything for solderless connections.

The Pickup Connector and Output Connector

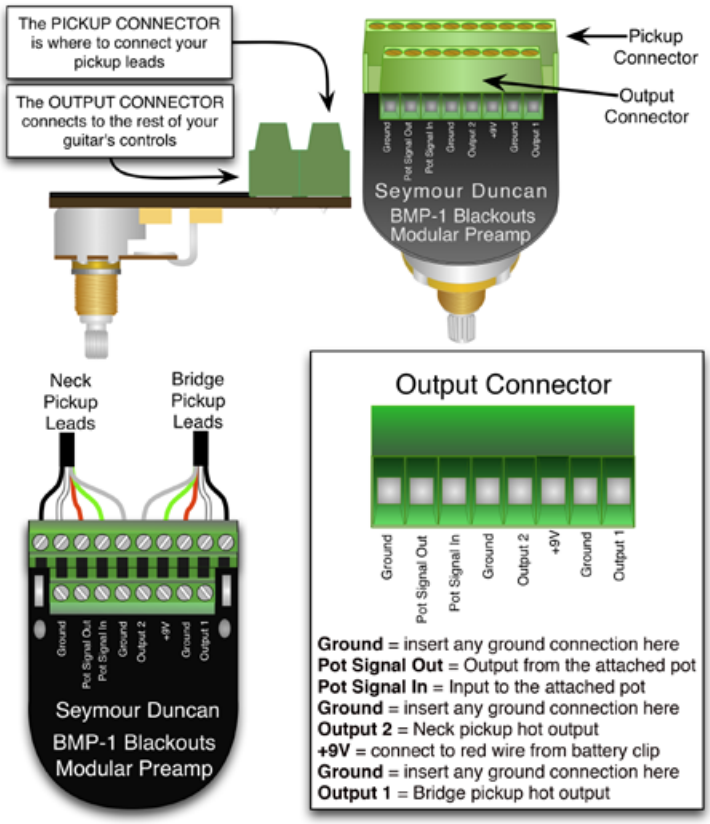

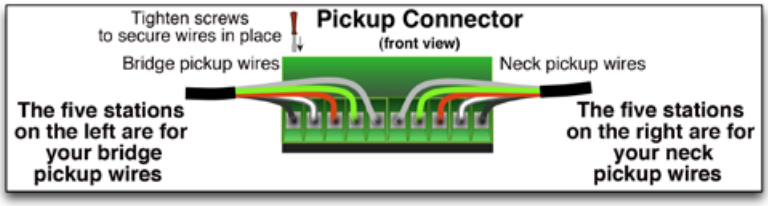

Continued on other side.

P/N 501020-155

3. The new preamp will take the place of one of your volume pots. Install the Blackouts Modular Preamp through the hole where your original potentiometer was located. Depending on the diameter of your existing pot, a reamer may be required to open the hole. Use the washer and nut to secure it snugly to the guitar.

4. Install all remaining 25K potentiometers.

5. Install the battery clip, and connect the red wire from the battery clip to the +9V station on the Output Connector. (Don't install a battery yet.)

6. Insert the wires from all pickups into the Pickup Connector. **Tip:** Tweezers can make this step go much faster. Tighten the connector screws using the included screwdriver.

7. For the remainder of your guitar's wiring, either follow the diagram below, or visit www.seymourduncan.com/wiring to find the control setup that matches your guitar.

8. Once the wiring is complete, install a fresh 9-Volt battery (not included) into the battery clip, plug your guitar in, and fire it up!

For more wiring diagrams, visit
www.seymourduncan.com/wiring

Simple Setup
One Volume, One Tone, and a Pickup Selector Switch

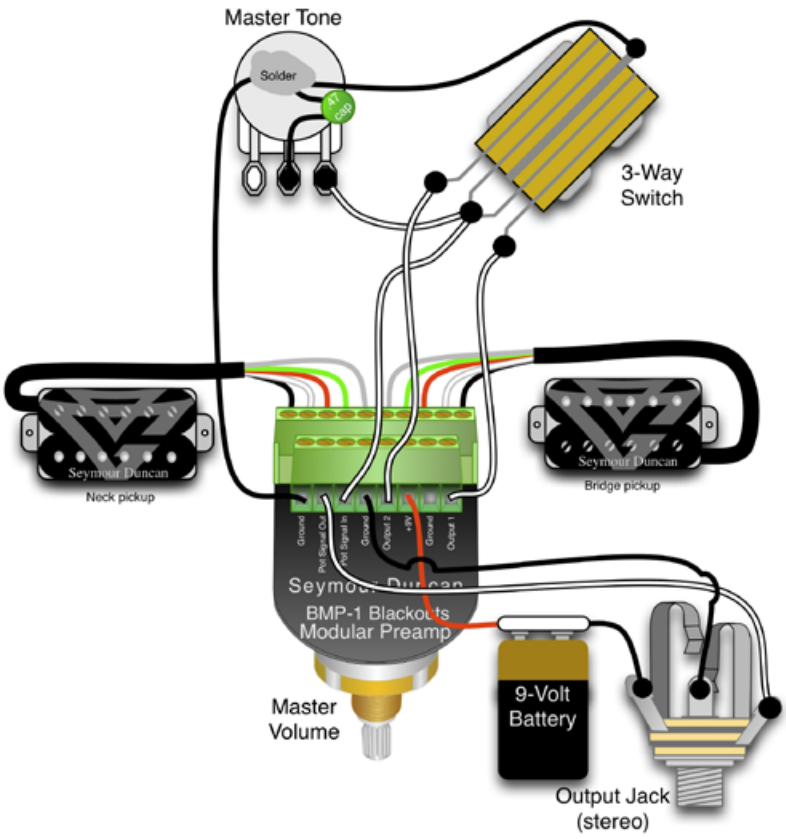

Les Paul® Wiring
Two Volumes, Two Tones, with Blackouts Modular Preamp as the Bridge Volume