TRONICALTUNE

TYPE TEMPLATES

UPDATE 08.08.2013

NOTE:

PUT A RULER ON THE SCALE TO CHECK CORRECTNESS!

PRINT SETTINGS (PDF)

PAGE ADAPTATION: NONE

PAGE SCALING: NONE

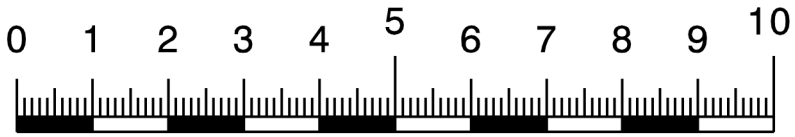

Scale: cm

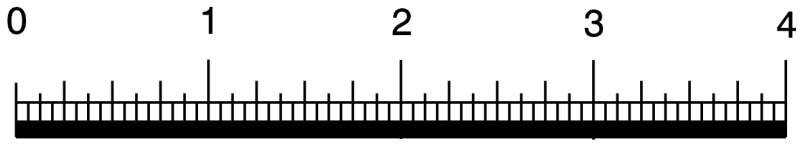

Scale: Inch

TYPE N

D´Angelo
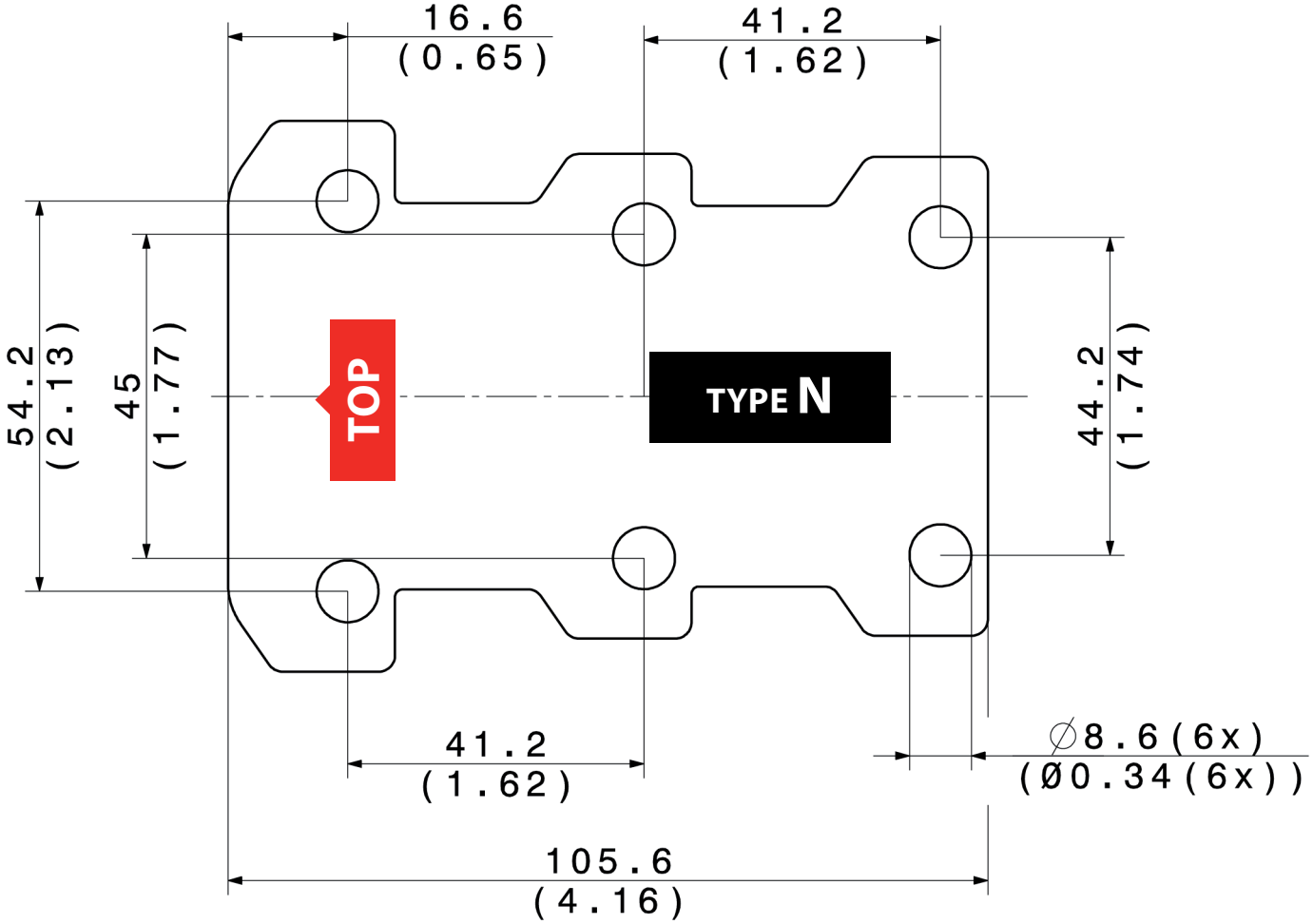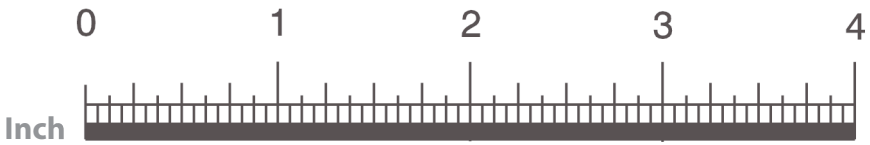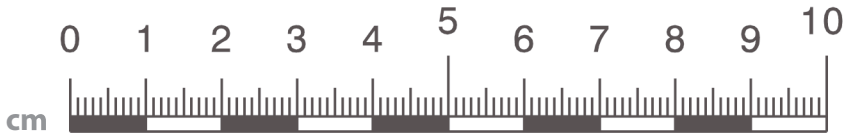
» Kurt Rosenwinkel